FNLPPVVAKEIVASCDKCQL

```
QUERY                 FNLPPVVAKEIVASCDKCQL

CONSENSUS_A           -----i-.AKEIVASCdKCQ
A.KE.Q23-CXC-CG       -----I-.AKEIVASCDKCQ
A.SE.SE6594           ------I.AKEIVASCDKCQ
A.SE.SE7253           ------I.AKEIVASCDKCQ
A.SE.SE7535           -----I-.AKEIVASCDKCQ
A.SE.SE8131           -----I-.AKEIVASCDKCQ
A.SE.SE8538           ------I.AKEIVASCNKCQ
A.SE.SE8891           -----I-.AKEIVASCDKCQ
A.UG.92UG037          -----I-.AKEIVASCDKCQ
A.UG.U455             -------.AKEIVASCNKCQ

CONSENSUS_B           -------.AKeIVAsCdKCQ
B.-.NL43E9            -------.AKEIVASCDKCQ
B.AU.MBC18            -----I-.AKEIVASCDKCQ
B.AU.MBC200           -------.AKEIVASCDKCQ
B.AU.MBC925           --I----.AKEIVA-CDKCQ
B.AU.MBCC54           -------.AKEIVASCDKCQ
B.AU.MBCC98           -----I-.AKDIVASCDKCQ
B.AU.MBCD36           -------.AKEIVASCDKCQ
B.CN.RL42             -------.AKEIVASCDKCQ
B.DE.D31              -------.AKEIVASCDKCQ
B.DE.HAN              -------.AKEIVASCDKCQ
B.FR.HXB2             -------.AKEIVASCDKCQ
B.GA.OYI              -------.AKEIVASCDKCQ
B.GB.CAM1             -------.AKEIVASCDKCQ
B.GB.MANC             -------.AKEIVASCDKCQ
B.NL.3202A21          -------.AKEIVASCDKCQ
B.TW.LM49             -------.AKEIVASCDKCQ
B.US.AD8              -----I-.AKEIVASCDKCQ
B.US.BC               -------.AKEIVASCDKCQ
B.US.DH123            ----A--.AKEIVA-CDKCQ
B.US.JRCSF            -----I-.AKEIVASCDKCQ
B.US.JRFL             -------.AKEIVASCDKCQ
B.US.MNCG             -----I-.AKEIVASCDKCQ
B.US.NY5CG            -------.AKEIVASCDKCQ
B.US.P896             -------.AKEIVASCNKCQ
B.US.RF               -------.AKEIVASCDKCQ
B.US.SF2              -------.AKEIVASCDKCQ
B.US.WEAU160          -------.AKEIVASCDKCQ
B.US.WR27             ------x.AKEIVA-CDKCQ
B.US.YU2              -------.AKEIVASCDKCQ

CONSENSUS_C           -----i-.aKEIVAsCdkCQ
C.BR.92BR025          -----I-.AKEIVASCDKCQ
C.BW.96BW01B03        -----I-.AKEIVASCDKCQ
C.BW.96BW0402         -----I-.AKEIVASCDKCQ
C.BW.96BW0502         -----I-.AKEIVASCDKCQ
C.BW.96BW1104         -----I-.AKEIVASCDKCQ
C.BW.96BW1210         -----I-.AKEIVASCDKCQ
C.BW.96BW15B03        -----I-.AKEIVASCDKCQ
C.BW.96BW1626         -----I-.AKEIVASCDKCQ
C.BW.96BW17A09        -----I-.AKEIVASCDKCQ
C.ET.ETH2220          --I----.PKEIVA-CDKCQ
C.IN.21068            -------.AKEIVASCDQCQ
C.IN.301904           -------.AKEIVASCDQCQ
C.IN.301905           -------.AKEIVASCDQCQ
C.IN.301999           -----I-.AKEIVASCGQCQ
C.IN.94IN11246        -------.AKEIVASCDQCQ

CONSENSUS_D           -------.AKEIVASCDKCQ
D.CD.84ZR085          -------.AKEIVASCDKCQ
D.CD.ELI              -------.AKEIVASCDKCQ
D.CD.NDK              -------.AKEIVASCDKCQ
D.CD.Z2Z6             -------.AKEIVASCDKCQ
D.UG.94UG1141         -------.AKEIVASCDKCQ

CONSENSUS_F1          -------.AKEIVASCDKCQ
F1.BE.VI850           -----I-.AKEIVASCDKCQ
F1.BR.93BR020.1       --I-A--.AKEIVASCDKCQ
F1.FI.FIN9363         -------.AKEIVASCDKCQ
F1.FR.MP411           -------.AKEIVASCDKCQ

CONSENSUS_F2          -------.AKEIVA?CDKCQ
F2.CM.MP255           -------.AKEIVANCDKCQ
F2.CM.MP257           -------.AKEIVASCDKCQ

CONSENSUS_G           -----i-.AKEIVASCdKCQ
G.BE.DRCBL            -----I-.AKEIVASCDKCQ
G.FI.HH8793           ----HI-.AKEIVASCHKCQ
G.NG.92NG083          -------.AKEIVASCDKCQ
G.SE.SE6165           -----I-.AKEIVASCDKCQ

CONSENSUS_H           -----I-.AKEIVASCDKCQ
H.BE.VI991            -----I-.AKEIVASCDKCQ
H.BE.VI997            -----I-.AKEIVASCDKCQ
H.CF.90CF056          -----I-.AKEIVASCDKCQ

CONSENSUS_J           -------.AKEIVASCDKCQ
J.SE.SE9173           -------.AKEIVASCDKCQ
J.SE.SE9280           -------.AKEIVASCDKCQ

CONSENSUS_K           -----i-.AKEIVASCDKCQ
K.CD.EQTB11C          -------.AKEIVASCDKCQ
K.CM.MP535            -----I-.AKEIVASCDKCQ
N.CM.YBF30            -----I-.AKEIVASCDKCQ

CONSENSUS_O           -G---?-.AKEIIASCPKCH
O.CM.ANT70C           -G-----.AKEIIASCPKCH
O.CM.MVP5180          -G---I-.AKEIIASCPKCH
AC.ET.E3099G          -----I-.AKEIVASCDKCQ
AC.IN.21301           -----II.AKEIVASCNQCQ
AC.RW.92RW009         -----I-.AKEIVASCDKCQ
AC.SE.SE9488          -----I-.AKEIVASCDKCQ
AC.ZM.ZAM184          -----I---.EIVASCDKCQ
ACD.SE.SE8603         ------I.AKEIVASCDKCQ
AD.SE.SE6954          -------.AKEIVASCDKCQ
AD.SE.SE7108          -----I-.AKEIVASCDKCQ
ADU.CD.MAL            -----I-.AKEIVASCDKCQ
AG.NG.G3              -----I-.AKEIVASCDKCQ
AG.SE.SE7812          -------.AKEIVASCDKCQ
AGHU.GA.VI354         -----I-.AKEIVASCDKCQ
AGHU.NO.NOGIL3        -----I-.AKEIVASCDKCQ
AGJ.AU.BFP90          -----I-.AKEIVASCDKCQ
AGJ.ML.95ML8          -----IL.AKEIVA-CDKCQ
AGU.CD.Z321           -----I-.AKEIVASCDKCQ
BF.BR.93BR029.4       --I----.AKEIVASCDKCQ
CRF01_AE.CF.90CF40    -----I-.AKEIVASCDKCQ
CRF01_AE.TH.93TH25    -----I-.AKEIVANCDKCQ
CRF01_AE.TH.CM240     -----I-.AKEIVTNCDKCQ
CRF01_AE.TH.TH022     -----I-.AKEIVANCDKCQ
CRF01_AE.TH.TH047     -------.AKEIVANCDKCQ
CRF02_AG.FR.DJ263     -----II.AKEIVA-CDQCQ
CRF02_AG.FR.DJ264     -----I-.AKEIVA-CDKCQ
CRF02_AG.NG.IBNG      -----I-.AKEIVASCDKCQ
CRF03_AB.RU.KAL153    -------.AKEIVASCDKCQ
CRF04_CPX.CY.94CY0    ----S--.AKEIVASCNKCQ
CRF04_CPX.GR.97PVC    -------.AKEIVASCNKCQ
CRF04_CPX.GR.97PVM    -------.AKEIVASCNKCQ
DF.CD.VI961           -------#AKEIVASCDKCQ
U.CD.VI1126           -----I-.AKEIVASCDKCQ

CONSENSUS_CPZ         -----i-.AKEIvA?CDKCq
CPZ.CD.CPZANT         Y----I-.AKEIIAQCDKCH
CPZ.GA.CPZGAB         -----I-.AKEIVAHCDKCQ
CPZ.US.CPZUS          -------.AKEIVASCDKCQ
```

EWRFDSRLAFHHVARELHPE

QUERY	EWRFDSRLAFHHVARELHPE
CONSENSUS_A	m-k------lk-r-?-----
A.FR.HIV232956	I-K------LR-I-Q-M---
A.FR.HIV232957	M-K---S--RR-I-L-K---
A.FR.HIV232959	M-K---S--RK-R-L-M---
A.KE.Q23-CXC-CG	K-K------LK-R-------
A.SE.SE6594	K-K------LK-L-C-K---
A.SE.SE7253	R--------LR-R-Q-M---
A.SE.SE7535	K-K------LK-R-Q-----
A.SE.SE8131	M-K--PH---K-R-F-----
A.SE.SE8538	M-K---K--LK-R-H-----
A.SE.SE8891	M-K------LT-R-------
A.UG.92UG037	R-K---S--RV-K-------
A.UG.U455	M-K---T--LK-R-Y-----
CONSENSUS_B	v-k---------m-------
B.-.E90NEF	V-------------------
B.-.HIV232997	M-K---x-----M-------
B.-.HIV233002	L-K---------MV---Y--
B.-.HIV233009	M-K---------M-------
B.-.HIV233016	I-K---------K-------
B.-.HIV233020	V---------R-M-------
B.-.HIV233023	V-----------I-Q-----
B.-.HIV233029	M-K---------M---K---
B.-.HIV233030	M-K-------------K---
B.-.HIV233032	RGS---T-------------
B.-.HIV233037	Q-K---T-----R---M---
B.-.HIV233038	M-K-------------M---
B.-.HIV233043	--K---------M-------
B.-.HIV233045	K-KL--------M-------
B.-.HIV233046	V-K---H---R-M-------
B.AU.1062-1-NEF	M-K---K---------K---
B.AU.93JW-3	V--L--H---R------Y--
B.AU.93LW-3	V-K---H---R---------
B.AU.AF064660	M-K------LR-F---K---
B.AU.AF064667	V-K-------------T---
B.AU.AF064676	------------I---I---
B.AU.MBC200	-------------------
B.AU.MBC925	------------M-------
B.CN.AF033570	M-K---------M---K---
B.CN.AF033572	M-K---------M---K---
B.CN.PRC8	M-K---------M---K---
B.CN.RL42	M-K------I--M---M---
B.DE.D31	V---------K-M-------
B.DE.HAN	K-K---H-----K-------
B.DE.HEI28CS	V-K------Y--M-------
B.DE.HEI3BL	R-K---x-------------
B.DE.HEI4BL	------------M-------
B.DE.HIVU52491	V-K---H-----M---K---
B.DE.NEFCC	Q-K---S------------
B.DE.NEFCG	M-K----x-xx-M---x---
B.DE.NH53	K-----H-----M-------
B.ES.89SP061	V-------VLR-M-------
B.ES.AF082355	----------R-M-------
B.ES.AF082357	------K-------------
B.ES.AF082358	V-K---H---R-M--$----
B.ES.AF082359	--K-----------------
B.ES.AF082363	--K---------M-------
B.ES.AF082364	M-K---------M-------
B.ES.AF082366	V-K-------Q-M-------
B.ES.AF082368	V-K---------M-------
B.ES.AF082370	V-K---------M-------
B.ES.AF082375	V-K---H--HR-M---I---
B.ES.AF082376	V-----------M-------
B.ES.AF082377	M-K---------M---K---
B.ES.AF082378	--K-----------------
B.ES.AF082380	V-----------M-------
B.ES.AF082383	Q-K------Y--M-------
B.ES.AF082386	M-K---H---R----D----
B.FR.HIV232961	----------Q-M-------
B.FR.HIV232962	M-K-------------K---
B.FR.HIV232963	M-K---------M---K---
B.FR.HIV232964	V-----------M-------
B.FR.HIV232965	V----------M-------
B.FR.HXB2	-------------------
B.FR.NE100	V-K---S-----K-------
B.FR.SWB884	V-K---S-----K-------
B.GA.OYI	V-K------R-M---V---
B.GB.001GH-93(1)	V-K---------M-------
B.GB.002EM-93(1)	Q-K---------M---Q---
B.GB.003PW-93(1)	------------M---M---
B.GB.005PF1-93(1)	Q-K-------------M---
B.GB.006DC-93(1)	Q-K---------M-------
B.GB.010JW-93(1)	M-K---H---R-M-------
B.GB.011JR-93(4)	V-Q---------M-------
B.GB.012WM-93(1)	V-----M---R-M-------
B.GB.013PP-94(2)	----------------M---
B.GB.016GB-93(1)	A-K---L-------------
B.GB.023PA-93(1)	K-K---------M-------
B.GB.025JN-93(1)	--K------L--M--G----
B.GB.027SL-93(1)	----------R-M-------
B.GB.028JH-94(1)	Q-K---H---R-M---K---
B.GB.030JG-93(1)	V-K---------M-------
B.GB.031DA-93(1)	------------M---K---
B.GB.032AN-93(1)	--K---K-------------
B.GB.037BS-94(2)	--K---------M-------
B.GB.039NM-94(1)	--K---------M-------
B.GB.044C1-94(2)	M-K-------------K---
B.GB.046JM-94(1)	V-K---------M---M---
B.GB.048AD-94(1)	--K---K-----M-------
B.GB.056RP-94B(1)	M-K---------M---K---
B.GB.057DR-94(1)	Q-K---------M-------
B.GB.065RK-94(1)	V-K---S-----R-------
B.GB.067MM-94(2)	--K------L--M-------
B.GB.068JB-94(1)	Q-----H---K-M-------
B.GB.098MS-94(1)	V-K---H---K-M---V---
B.GB.103CD-94(1)	----------M-------
B.GB.104RT-94(1)	----------------K---
B.GB.105AS-94(1)	L-K---H-----K-------
B.GB.112CR-94(2)	M-K---------M-K-K---
B.GB.117CH-94(2)	----------M-------
B.GB.122PS-95(1)	------H---R-M-------
B.GB.124PD-95(1)	V-K---H---R-M-------
B.GB.127RG-96(1)	M-K-----------------
B.GB.130WDC-95(1)	Q-K-------Q-M-------
B.GB.131MVS-95(1)	V-K---------M-K-----
B.GB.143PL-95(1)	V-K---H-----M-------
B.GB.151DH-95(1)	M-K---------M-------
B.GB.157GT-95(1)	V-K-----------------
B.GB.160KO-95(1)	M-K---S-----R----Y--
B.GB.161KC-95(1)	V-K---------M---K---
B.GB.162BB-95(1)	----------R-M-------
B.GB.163NG-95(1)	----------M-------
B.GB.164SZ-95(1)	V-K---H---R-M-------
B.GB.165DH-95(1)	M-K---------M-------
B.GB.166PW-95(1)	M-K----------I---
B.GB.167RW-95(1)	M-K-----------------
B.GB.168MB-95(1)	M-K----------R--
B.GB.CAM1	M-K---------M---K---
B.GB.GLNEF1	----------RM---K---
B.GB.MANC	V-K----------PD-----
B.GB.NEF2	V-K--CH---R---------
B.GB.NEF3	-------------------
B.GB.NEF5	--K---------M---K---
B.IN.HIVP35A	Q-K-----------------
B.IT.AF011471	V-K---K--C-----V----
B.IT.AF011474	M-K------L--M---I---
B.IT.AF011477	V-----------M---K---
B.IT.AF011478	V------x----M---K---
B.IT.AF011480	-------------------
B.IT.AF011482	V-K---------M-------
B.IT.AF011483	x-K---S------------
B.IT.AF011486	A-Q----------Q---
B.IT.AF011488	A-K---L------------
B.IT.AF011492	V----------x---
B.IT.AF047080	V-K-----------------
B.IT.AF047081	M-Q---------M---K---
B.IT.B.IT-L1	V---------R-----T---
B.IT.B.IT-L2	V-K---H---K------Q--
B.IT.B.IT-L3	A-----x---------M---
B.IT.B.IT-L4	A-K-----------------
B.IT.B.IT-L5	M-K-----------------
B.IT.B.IT-R1	M-K---N----I-------
B.IT.B.IT-R2	-------------------
B.IT.B.IT-R3	--K---G------------
B.IT.B.IT-R4	-------------------
B.IT.B.IT-R5	V----------SC-CVF---
B.KR.AF063915	----------M---K---
B.KR.AF063916	----------M---K---
B.KR.AF063919	M-K---------M-------
B.KR.AF063921	----------K---
B.KR.AF063926	------H---R-M-------
B.KR.AF063927	V-K---------M---K---
B.KR.AF063931	----------M--GK---
B.KR.HIVZ98019	V----------I---K---
B.KR.HIVZ98022	V-K---------M---KY--
B.KR.HIVZ98024	----------M---K---
B.KR.HIVZ98025	M-K----------D----
B.KR.HIVZ98027	V----------K-------
B.KR.HIVZ98029	V----------M---K---
B.KR.HIVZ98030	V-K---S-----M---K---

```
B.KR.HIVZ98032        V-K------L------K---
B.KR.HIVZ98034        V-------------------
B.NL.3202A21          ------------M-------
B.NL.NEFA             V-K---------M-------
B.NL.NEFD             V-K------V--M-------
B.NL.NEFE             --K---S---Q-K----Y--
B.SE.AF047082         Q-K---H--YR-M-------
B.SE.AF047083         Q-K---------M-------
B.SE.AF047085         M-K---------I-------
B.TH.28-19            M-K---------M-------
B.TH.AF082838         --K---K-----R-------
B.TH.AF082839         Q-K-----------------
B.TH.AF082841         M-K---------M-------
B.TW.LM49             V-----T-----R-------
B.US.HIV1U03375       Q-K---------M-------
B.US.005PF-96(1)      Q-K-------------K---
B.US.AD-93(1)         ----------------Q---
B.US.AD8              Q-K---------M-------
B.US.BC               ------------M-------
B.US.BIB              --K---S-----R-------
B.US.BJ-93(1)         M-K-----------------
B.US.BO1              ------------M-Q--Y--
B.US.BRVA             Q-----------M-------
B.US.BT-94(1)         V-K-----------------
B.US.CD1              --K---------M-------
B.US.D8511            Q-K---------M-------
B.US.DH1              M-K---------M-------
B.US.DH123            L-K------Y--M-------
B.US.DJ-93(1)         M-K---------M-------
B.US.E1               ------------M-------
B.US.E81NEF           ------------M-------
B.US.E88NEF           V-----------M-------
B.US.EP-94(1)         M-K---S---------K---
B.US.FA-93(1)         Q---------------M---
B.US.HIV1U16893       M-K-------Q-M-------
B.US.HIV1U24455       --------------------
B.US.HIV1U26074       V-K---------M---P---
B.US.HIV1U26098       M-K---L---R-M---K---
B.US.HIV1U26112       V-K------L--M-------
B.US.HIV1U26119       --K---------M-------
B.US.HIV1U26141       V---------------K---
B.US.HIVU44444        M-K---------M-------
B.US.HIVU44450        V-K-----T-----------
B.US.HIVU44456        --K-----------------
B.US.HIVU44465        Q-K-------------I---
B.US.HIVU44468        V-K---T-----K-------
B.US.HP87B1           ------------M-------
B.US.HS-93(1)         M-K-------R-M-------
B.US.JRCSF            V-K---K--L----------
B.US.JRFL             ------K-------------
B.US.LM1              V-K-------N-M-------
B.US.LT-87-1(1)       M-K-------------Q---
B.US.MB-94(1)         Q-K---------M-------
B.US.MNCG             V-KS--H---Q-Y-------
B.US.NC7              V-----K-------------
B.US.NEF              --------------------
B.US.NEF164B          M-K---------I---K---
B.US.NEF166E          V-----------M---K---
B.US.NEF179C          M-K---------M-Q-K---
B.US.NEF226B          Q----G----Q-M---K---
B.US.P102A13          M-K-------Y-T---K---
B.US.P233A17          Q-K---------M-------
B.US.P248A01          Q-K---------M-------
B.US.P357A01          ----------------K---
B.US.P896             V-------------------
B.US.PC-93(1)         Q-------------------
B.US.PRISO(1)         M-K---------M---K---
B.US.RF               V-K-------------K---
B.US.RP12             A-------------------
B.US.RR1              ------S-----R---K--D
B.US.SC               -----N------M--D----
B.US.SF2              V-----K-----M-------
B.US.U16917           Q-K-----------------
B.US.WEAU160          M-K---K-------------
B.US.WR27             V-K---------K-------
B.US.YU2              --------------------

CONSENSUS_C           k-k---h--rr-m-------
C.BR.92BR025          Q-K---L--RR-M-------
C.BW.96BW01B21        K-K---Q--RR-M-------
C.BW.96BW0402         R-K---H--HR-M-------
C.BW.96BW0502         K-K---Q--RR-M----Y--
C.BW.96BW1104         K-K---Q--RR-L-------
C.BW.96BW1210         K-K---S--RR-LT--K---
C.BW.96BW15B03        M-K---H--RR-M-------
C.BW.96BW16B01        K-K---H--RR-M-------
C.BW.96BW17A09        K-V---H--RK-M-------
C.ET.ETH2220          K-K---H--RR-M-------
C.FR.HIV232966        M-K---H--HR-M-------
C.FR.HIV232967        R-K---E--RR---------
C.FR.HIV232968        K-K---L--RR-M-------
C.FR.HIV232969        K-K---S--RR---------
C.FR.HIV232970        R-K---H--HR-M-------
C.FR.HIV232971        K-K---Q--HR-M-------
C.FR.HIV232972        M-K---H--RR-M-------
C.FR.HIV232973        R-K---H--RR-L---I---
C.FR.HIV232976        R-K---Q--RR-I-------
C.FR.HIV232977        K-K---H--HR-M-------
C.FR.HIV232978        M-K---L--RK-L-------
C.FR.HIV232979        K-K---H--HK-M-------
C.FR.HIV232980        Q-K---L--HR-M-------
C.FR.HIV232996        M-K---S--HR---------
C.IN.21068            V-K---Q--HK-R-------
C.IN.301904           Q-K---L--HR-R-------
C.IN.301999           Q-K---H--HR-M-------
C.IN.94IN11246        M-K..#Q--HR-I-------
C.IN.HIVY15117        M-K---Q--RR-MG-G----
C.IN.HIVY17884        K-K---Q--RR-W-------
C.IN.HIVY17891        Q-K---Q--HR-R-------
C.IN.HIVY17892        R-K---Q--LR-T-------

CONSENSUS_D           v---N-----E-K-?-k---
D.CD.84ZR085          V---N-----E-K-K-KY--
D.CD.ELI              K---N-----E-K---M---
D.CD.NDK              M---N----LE-K-------
D.UG.94UG1141         V---N-----E-K-KMK---

CONSENSUS_F           r-?------lR-i---r---
F.CM.HIV232985        R-K---S--LR-----R---
F.CM.HIV232986        K-Q------LR-I---R---
F.FR.HIV232987        R-E-------R-I---K---

CONSENSUS_F1          ?-?------lr-I---r---
F1.BE.VI850           R-K---S--LR-I---R---
F1.BR.93BR020.1       K-E------LR-I---R---
F1.FI.FIN9363         K-K------LK-I---R---
F1.FR.MP411           R-E-------R-I---K---

CONSENSUS_F2          ?-?---?--LR-?---R---
F2.CM.MP255           R-K---S--LR-----R---
F2.CM.MP257           K-Q------LR-I---R---

CONSENSUS_G           v-----S--Rr-l-------
G.BE.DRCBL            V-----S--RR-L-------
G.FI.HH8793           R--#--S--RR-L-Q-----
G.ML.HIV232990        V-----S--RR-I-------
G.NG.92NG083          V---N-S--RR-L-------
G.NG.HIV232991        V-----S--RK-I-----L-
G.NG.HIV232992        V-----S--RR-L-------
G.SE.SE6165           V-----S--RR-I-------

CONSENSUS_H           m-k------?r-r-------
H.BE.VI991            M-K------LR-R-K-----
H.BE.VI997            M-K-------T-T---K---
H.CD.HIV232994        K-T------RR-M-------
H.CD.HIV232995        M-K---H---R-R-------
H.CF.90CF056          M-K------LT-L--VK---

CONSENSUS_J           ?-K---S--RR-I-------
J.SE.SE9173           K-K---S--RR-I-------
J.SE.SE9280           Q-K---S--RR-I-------

CONSENSUS_K           ?-K---S--R?-----?--?
K.CD.EQTB11C          K-K---S--RK-----M---
K.CM.MP535            M-K---S--RR--------D
N.CM.YBF30            V-----S--RR---------

CONSENSUS_O           ?-?--RS-G?T-?-???---
O.CM.ANT70C           M-K--RS-GNT---MIT---
O.CM.MVP5180          K-Q--RS-GLT-I-LQK---
CRF01_AE.CF.90CF402   M-K---S--RR-I-------
CRF01_AE.FR.232982    M-K---A--RK-I------D
CRF01_AE.FR.232983    M-K---A--RT-T-------
CRF01_AE.FR.232984    M-K---A--RK-I-------
CRF01_AE.TH.1-2       M-K---A--RK-I---M---
CRF01_AE.TH.1-3       M-K--IA--RK-I---M---
CRF01_AE.TH.11-25     I-K---A--RR-I----R--
CRF01_AE.TH.11-31     I-K---A--RR-I-------
CRF01_AE.TH.122-21    M-K---A--RK-I-------
CRF01_AE.TH.18-47     M-K---A--RK-I---Q---
CRF01_AE.TH.235-3     M-K---A--RK-I-------
CRF01_AE.TH.235-32    L-K---A--RK-I-------
CRF01_AE.TH.24-54     M-K---S--RK-I---Q---
CRF01_AE.TH.240-12    M-K---A--RK-----Q---
```

```
CRF01_AE.TH.26-3      M-K---A--RR-I----R--
CRF01_AE.TH.35-6      M-K---A--RK-I---Q---
CRF01_AE.TH.6-9       M-K---A--RK-I----R--
CRF01_AE.TH.73-44     M-K---S--RR-I---Q---
CRF01_AE.TH.74-26     L-K--GT--RQ-T-------
CRF01_AE.TH.89-30     M-K---A--RK-I------Q
CRF01_AE.TH.9-3       M-K---A--RK-T-------
CRF01_AE.TH.93TH253   I-K---A--RR-I----R--
CRF01_AE.TH.98-4      M-K---A--RR-I----R--
CRF01_AE.TH.CM240     M-K---A--RK-----Q---
CRF01_AE.TH.TH022     I-K---S--RK-L-------
CRF01_AE.TH.TH047     M-K---A--RK-I---M---
CRF02_AG.FR.DJ263     V-----S--RT-R-------
CRF02_AG.FR.DJ264     V-----S--RR-I---R---
CRF02_AG.NG.IBNG      I---------R-T-------
CRF03_AB.RU.KAL1532   M-K------LT-R-------
CRF04_cpx.CY.94CY03   K-K------YK---------
CRF04_cpx.GR.97PVCH   K-K-------K-I-------
CRF04_cpx.GR.97PVMY   K-K---L--YR-M-------
AC.IN.21301           Q-K---H--YK-Q---R---
AC.RW.92RW009         K-K---H--HR-M-------
AC.SE.SE9488          V--------LK-L---K---
AC.ZM.ZAM184          R-K---H--LR-R------D
ACD.SE.SE8603         R-K---Q--RR-M---M---
AD.SE.SE6954          M---N-----E-K-HQ----
AD.SE.SE7108          K-Q------LK-L---K---
ADHU.NO.NOGIL3        M---------K-R-------
ADU.CD.MAL            K-K---S--LR-R---Q---
AF.GA.HIV232981       M-K---H--RK-L---K---
AG.NG.G3              V-----S--RR-I---Q---
AG.SE.SE7812          V---------T-K---M---
AGHU.GA.VI354         M-K---S--RE----K-Y--
AGJ.AU.BFP90          K-K---S--RR-I---K---
AGJ.ML.95ML84         M-K---S--RR-T---M---
AGU.CD.Z321           M-K---S--RK-L---M---
BF.BR.93BR029.4       Q-----------M-------
DF.BE.VI961           R-K---S--LK-I---RR--
GH.GA.HIV232993       V-----S--RR---------
GU.FR.HIV232974       V--------LK-R-------
U.CD.VI1126           V-K------LK-L---K---
U.CM.HIV232988        M-K---S--RR--------D
U.FR.HIV232958        M-K---S--RR-I---M---
U.FR.HIV232960        K-Q---S--RR-I------D

CONSENSUS_CPZ         ?-?--??--?R-?-?-?---
CPZ.GA.CPZGAB         V--------LR-I---Q---
CPZ.US.CPZUS          I-Q--TE--RR-R-K-----
```

YNVLPQGWKGSPAIFQSSMT

```
QUERY                YNVLPQGWKGSPAIFQSSMT

CONSENSUS_A          --------------------
A.KE.Q23-CXC-CG      --------------------
A.SE.SE6594          x-------------------
A.SE.SE7253          --------------------
A.SE.SE7535          --------------------
A.SE.SE8131          --------------------
A.SE.SE8538          ------------S-------
A.SE.SE8891          -------------------I
A.UG.92UG037         ----------------A---
A.UG.U455            ------------S-------

CONSENSUS_B          --------------------
B.-.NL43E9           ----------------C---
B.AU.MBC18           --------------------
B.AU.MBC200          --------------------
B.AU.MBC925          ----------------C---
B.AU.MBCC54          --------------------
B.AU.MBCC98          ----------------Y---
B.AU.MBCD36          --------------------
B.CN.RL42            ----------------C---
B.DE.D31             --------------------
B.DE.HAN             --------------------
B.FR.HXB2            --------------------
B.GA.OYI             --------------------
B.GB.CAM1            --------------------
B.GB.MANC            --------------------
B.NL.3202A21         ----------------C---
B.TW.LM49            --------------------
B.US.AD8             --------------------
B.US.BC              --------------------
B.US.DH123           --------------------
B.US.JRCSF           --------------------
B.US.JRFL            --------------------
B.US.MNCG            --------------------
B.US.NY5CG           ----------------C---
B.US.P896            --------------------
B.US.RF              --------------------
B.US.SF2             --------------------
B.US.WEAU160         --------------------
B.US.WR27            ------------T--P----
B.US.YU2             --------------------

CONSENSUS_C          --------------------
C.BR.92BR025         ------------S-----T-
C.BW.96BW01B03       --------------------
C.BW.96BW0402        -------------------I
C.BW.96BW0502        --------------------
C.BW.96BW1104        ------------S-------
C.BW.96BW1210        --------------------
C.BW.96BW15B03       ------------S-------
C.BW.96BW1626        --------------------
C.BW.96BW17A09       --------------------
C.ET.ETH2220         ------------P------P
C.IN.21068           ----------------N---
C.IN.301904          --------------------
C.IN.301905          ----------------C---
C.IN.301999          ----------------A---
C.IN.94IN11246       --------------------

CONSENSUS_D          --------------------
D.CD.84ZR085         -------------------I
D.CD.ELI             --------------------
D.CD.NDK             --------------------
D.CD.Z2Z6            --------------------
D.UG.94UG1141        --------------------

CONSENSUS_F1         ----------------c---
F1.BE.VI850          ----------------C---
F1.BR.93BR020.1      ----------------Y---
F1.FI.FIN9363        ----------------C---
F1.FR.MP411          --------------------

CONSENSUS_F2         ----------------?--?
F2.CM.MP255          ----------------C---
F2.CM.MP257          -------------------I

CONSENSUS_G          --------------------
G.BE.DRCBL           -#..----------------
G.FI.HH8793          --------------------
G.NG.92NG083         --------------------
G.SE.SE6165          --------------------
CONSENSUS_H          --------------------
H.BE.VI991           --------------------
H.BE.VI997           --------------------
H.CF.90CF056         --------------------

CONSENSUS_J          ----------------C---
J.SE.SE9173          ----------------C---
J.SE.SE9280          ----------------C---

CONSENSUS_K          ----------------?---
K.CD.EQTB11C         ----------------C---
K.CM.MP535           ----------------H---
N.CM.YBF30           -----------------T--
CONSENSUS_O          --------------------
O.CM.ANT70C          --------------------
O.CM.MVP5180         --------------------
AC.ET.E3099G         --------------------
AC.IN.21301          ----------------A---
AC.RW.92RW009        ----------------N---
AC.SE.SE9488         --------------------
AC.ZM.ZAM184         ------------S-------
ACD.SE.SE8603        --------------------
AD.SE.SE6954         --------------------
AD.SE.SE7108         --------------------
ADU.CD.MAL           --------------------
AG.NG.G3             --------------------
AG.SE.SE7812         ----------------A---
AGHU.GA.VI354        --------------------
AGHU.NO.NOGIL3       ----------------C---
AGJ.AU.BFP90         -------------------I
AGJ.ML.95ML8         -------------------I
AGU.CD.Z321          --------------------
BF.BR.93BR029.4      --------------------
CRF01_AE.CF.90CF40   --------------------
CRF01_AE.TH.93TH25   --------------------
CRF01_AE.TH.CM240    --------------------
CRF01_AE.TH.TH022    ----------------C-T-
CRF01_AE.TH.TH047    --------------------
CRF02_AG.FR.DJ263    ----------------A---
CRF02_AG.FR.DJ264    ----------------A---
CRF02_AG.NG.IBNG     ----------------A---
CRF03_AB.RU.KAL153   --------------------
CRF04_CPX.CY.94CY0   ----------------C---
CRF04_CPX.GR.97PVC   ----------------Y---
CRF04_CPX.GR.97PVM   ----------------C---
DF.CD.VI961          ----------------C---
U.CD.VI1126          ----------------Y---

CONSENSUS_CPZ        --------------------
CPZ.CD.CPZANT        ----------------A---
CPZ.GA.CPZGAB        ------------S-------
CPZ.US.CPZUS         --------------------
```

SPAIFQSSMTKILEPFRKQN

```
QUERY                SPAIFQSSMTKILEPFRKQN

CONSENSUS_A          -----------------sk-
A.KE.Q23-CXC-CG      -----------------SK-
A.SE.SE6594          -----------------SK-
A.SE.SE7253          -----------------LK-
A.SE.SE7535          -----------------ER-
A.SE.SE8131          -----------------SK-
A.SE.SE8538          --S--------------SK-
A.SE.SE8891          ---------I-------V--
A.UG.92UG037         ------A----------SK-
A.UG.U455            --S--------------S-H

CONSENSUS_B          --------------------
B.-.NL43E9           ------C-------------
B.AU.MBC18           ----------R------R--
B.AU.MBC200          --------------------
B.AU.MBC925          ------C-------------
B.AU.MBCC54          --------------------
B.AU.MBCC98          ------Y-------------
B.AU.MBCD36          --------------------
B.CN.RL42            ------C-------------
B.DE.D31             --------------------
B.DE.HAN             --------------------
B.FR.HXB2            --------------------
B.GA.OYI             --------------------
B.GB.CAM1            --------------------
B.GB.MANC            --------------------
B.NL.3202A21         ------C-------------
B.TW.LM49            ----------R---------
B.US.AD8             --------------------
B.US.BC              --------------------
B.US.DH123           --------------------
B.US.JRCSF           --------------------
B.US.JRFL            --------------------
B.US.MNCG            --------------------
B.US.NY5CG           ------C-------------
B.US.P896            --------------------
B.US.RF              ----------------K---
B.US.SF2             --------------------
B.US.WEAU160         --------------------
B.US.WR27            --T--P----Q-------P-
B.US.YU2             ----------T---------

CONSENSUS_C          -----------------a--
C.BR.92BR025         --S-----T--------A--
C.BW.96BW01B03       -----------------AL-
C.BW.96BW0402        ---------I-------TK-
C.BW.96BW0502        -----------------L--
C.BW.96BW1104        --S--------------AK-
C.BW.96BW1210        -----------------A--
C.BW.96BW15B03       --S--------------AR-
C.BW.96BW1626        -----------------A--
C.BW.96BW17A09       -----------------A--
C.ET.ETH2220         --P------PQ------AP-
C.IN.21068           ------N---R------A--
C.IN.301904          ----------R------AR-
C.IN.301905          ------C---R------A--
C.IN.301999          ------A----------A--
C.IN.94IN11246       -----------------GR-

CONSENSUS_D          --------------------
D.CD.84ZR085         ---------I----------
D.CD.ELI             --------------------
D.CD.NDK             --------------------
D.CD.Z2Z6            --------------------
D.UG.94UG1141        --------------------

CONSENSUS_F1         ------c----------ak-
F1.BE.VI850          ------C----------MK-
F1.BR.93BR020.1      ------Y------D---AK-
F1.FI.FIN9363        ------C----------TR-
F1.FR.MP411          -----------------AK-

CONSENSUS_F2         ------?--?-------??-
F2.CM.MP255          ------C----------AK-
F2.CM.MP257          ---------I--------E-

CONSENSUS_G          -----------------tk-
G.BE.DRCBL           -----------------T--
G.FI.HH8793          -----------------IK-
G.NG.92NG083         ---------------S-TK-
G.SE.SE6165          ----------R------AN-

CONSENSUS_H          --------------------
H.BE.VI991           --------------------
H.BE.VI997           --------------------
H.CF.90CF056         -------------A---E--

CONSENSUS_J          ------C------K---ER-
J.SE.SE9173          ------C------K---ER-
J.SE.SE9280          ------C------K---ER-

CONSENSUS_K          ------?----------?K-
K.CD.EQTB11C         ------C----------RK-
K.CM.MP535           ------H----------IK-
N.CM.YBF30           -------T---------EKH

CONSENSUS_O          -------------D---??-
O.CM.ANT70C          -------------D---RD-
O.CM.MVP5180         -------------D----S-
AC.ET.E3099G         ----------E------TK-
AC.IN.21301          ------A----------A--
AC.RW.92RW009        ------N----------A--
AC.SE.SE9488         -------------A---S--
AC.ZM.ZAM184         --S----------D---SK-
ACD.SE.SE8603        -----------------SK-
AD.SE.SE6954         --------------------
AD.SE.SE7108         -----------------SK-
ADU.CD.MAL           -----------------TK-
AG.NG.G3             -----------------TE-
AG.SE.SE7812         ------A----------TK-
AGHU.GA.VI354        --------------------
AGHU.NO.NOGIL3       ------C----------AK-
AGJ.AU.BFP90         ---------I-------IK-
AGJ.ML.95ML8         ---------I-------TK-
AGU.CD.Z321          -----------------TK-
BF.BR.93BR029.4      --------------------
CRF01_AE.CF.90CF40   -----------------AR-
CRF01_AE.TH.93TH25   -----------------IK-
CRF01_AE.TH.CM240    -----------------IK-
CRF01_AE.TH.TH022    ------C-T--------TK-
CRF01_AE.TH.TH047    -----------------IK-
CRF02_AG.FR.DJ263    ------A---N---HY-IK-
CRF02_AG.FR.DJ264    ------A----------IK-
CRF02_AG.NG.IBNG     ------A----------TK-
CRF03_AB.RU.KAL153   --------------------
CRF04_CPX.CY.94CY0   ------C----------FK-
CRF04_CPX.GR.97PVC   ------Y----------TR-
CRF04_CPX.GR.97PVM   ------C----------TK-
DF.CD.VI961          ------C-------------
U.CD.VI1126          ------Y----------TK-

CONSENSUS_CPZ        -------------?---?k?
CPZ.CD.CPZANT        ------A------A---DKY
CPZ.GA.CPZGAB        --S--------------EK-
CPZ.US.CPZUS         -------------D-----H
```

KILEPFRKQNPDIVIYQYMD

```
QUERY                 KILEPFRKQNPDIVIYQYMD

CONSENSUS_A           -------sk--e-i------
A.KE.Q23-CXC-CG       -------SK--E--------
A.SE.SE6594           -------SK----I------
A.SE.SE7253           -------LK--E-I------
A.SE.SE7535           -------ER--EVI------
A.SE.SE8131           -------SK--E-I------
A.SE.SE8538           -------SK--E-I------
A.SE.SE8891           -------V---E-I------
A.UG.92UG037          -------SK-----------
A.UG.U455             -------S-H----------

CONSENSUS_B           --------------------
B.-.NL43E9            --------------------
B.AU.MBC18            R------R------------
B.AU.MBC200           -----------E--------
B.AU.MBC925           -----------E--------
B.AU.MBCC54           --------------------
B.AU.MBCC98           --------------------
B.AU.MBCD36           --------------------
B.CN.RL42             --------------------
B.DE.D31              --------------------
B.DE.HAN              --------------------
B.FR.HXB2             --------------------
B.GA.OYI              --------------------
B.GB.CAM1             --------------------
B.GB.MANC             ------------V-------
B.NL.3202A21          --------------------
B.TW.LM49             R-------------------
B.US.AD8              --------------------
B.US.BC               --------------------
B.US.DH123            --------------------
B.US.JRCSF            -------------I------
B.US.JRFL             -------------I------
B.US.MNCG             --------------------
B.US.NY5CG            --------------------
B.US.P896             --------------------
B.US.RF               ------K----E--------
B.US.SF2              --------------------
B.US.WEAU160          --------------------
B.US.WR27             Q-------P--E--------
B.US.YU2              T-----------L-------

CONSENSUS_C           -------a---e--------
C.BR.92BR025          -------A---E-I------
C.BW.96BW01B03        -------AL--E--------
C.BW.96BW0402         -------TK-----------
C.BW.96BW0502         -------L---E--------
C.BW.96BW1104         -------AK--EL-------
C.BW.96BW1210         -------A---E--------
C.BW.96BW15B03        -------AR--E--------
C.BW.96BW1626         -------A---G--------
C.BW.96BW17A09        -------A---E--------
C.ET.ETH2220          Q------AP--E--------
C.IN.21068            R------A---E--------
C.IN.301904           R------AR--E--------
C.IN.301905           R------A---E--------
C.IN.301999           -------A---E--------
C.IN.94IN11246        -------GR--E-D------

CONSENSUS_D           -----------E?-------
D.CD.84ZR085          -----------EV-------
D.CD.ELI              -----------EM-------
D.CD.NDK              -----------E--------
D.CD.Z2Z6             -----------E--------
D.UG.94UG1141         -----------EMI------

CONSENSUS_F1          -------ak-----------
F1.BE.VI850           -------MK-----------
F1.BR.93BR020.1       ---D---AK----------
F1.FI.FIN9363         -------TR-----------
F1.FR.MP411           -------AK-----------

CONSENSUS_F2          -------??--E--------
F2.CM.MP255           -------AK--E--------
F2.CM.MP257           --------E--E--------

CONSENSUS_G           -------tk--Em-------
G.BE.DRCBL            -------T---E--------
G.FI.HH8793           -------IK--EM-------
G.NG.92NG083          -----S-TK--EM-------
G.SE.SE6165           R------AN--EM-------

CONSENSUS_H           -----------E?i------
H.BE.VI991            -----------EVI------
H.BE.VI997            -----------E-I------
H.CF.90CF056          ---A---E---EM-------

CONSENSUS_J           ---K---ER--E--------
J.SE.SE9173           ---K---ER--E--------
J.SE.SE9280           ---K---ER--E--------

CONSENSUS_K           -------?K--em-------
K.CD.EQTB11C          -------RK---M-L-----
K.CM.MP535            -------IK--EM-------
N.CM.YBF30            -------EKH-E-I------

CONSENSUS_O           ---D---??--E?E-?--?-
O.CM.ANT70C           ---D---RD--ELE-C----
O.CM.MVP5180          ---D----S--EVE----I-
AC.ET.E3099G          E------TK--EM-------
AC.IN.21301           -------A---E--------
AC.RW.92RW009         -------A--QE--------
AC.SE.SE9488          ---A---S---E-I------
AC.ZM.ZAM184          ---D---SK--E--------
ACD.SE.SE8603         -------SK---MI------
AD.SE.SE6954          -----------EM-------
AD.SE.SE7108          -------SK--ELI------
ADU.CD.MAL            -------TK--E--------
AG.NG.G3              -------TE--E--------
AG.SE.SE7812          -------TK--E--------
AGHU.GA.VI354         -----------EM-------
AGHU.NO.NOGIL3        -------AK--E--------
AGJ.AU.BFP90          -------IK--E--------
AGJ.ML.95ML8          -------TK--E--------
AGU.CD.Z321           -------TK--E--------
BF.BR.93BR029.4       --------------------
CRF01_AE.CF.90CF40    -------AR--E--------
CRF01_AE.TH.93TH25    -------IK--EM-------
CRF01_AE.TH.CM240     -------IK--EM-----K-
CRF01_AE.TH.TH022     -------TK--E--------
CRF01_AE.TH.TH047     -------IK--EM-------
CRF02_AG.FR.DJ263     N---HY-IK--E-M------
CRF02_AG.FR.DJ264     -------IK--E--------
CRF02_AG.NG.IBNG      -------TK--E--------
CRF03_AB.RU.KAL153    -----------E--------
CRF04_CPX.CY.94CY0    -------FK--E--------
CRF04_CPX.GR.97PVC    -------TR--E--------
CRF04_CPX.GR.97PVM    -------TK--EM-------
DF.CD.VI961           -----------EM-------
U.CD.VI1126           -------TK--EM-------

CONSENSUS_CPZ         ---?---?k?--v?------
CPZ.CD.CPZANT         ---A---DKY-AVE------
CPZ.GA.CPZGAB         -------EK----T------
CPZ.US.CPZUS          ---D-----H--VI------
```

DIQKLVGKLNWASQIYPGIK

```
QUERY                DIQKLVGKLNWASQIYPGIK

CONSENSUS_A          ----------------a---
A.KE.Q23-CXC-CG      ----------------A---
A.SE.SE6594          --------------------
A.SE.SE7253          ----------------A---
A.SE.SE7535          ----------------A---
A.SE.SE8131          ----------------A---
A.SE.SE8538          ----------------A---
A.SE.SE8891          ----------------V---
A.UG.92UG037         ----------------A---
A.UG.U455            ----------------A---

CONSENSUS_B          ----------------a---
B.-.NL43E9           ----------------A---
B.AU.MBC18           --------------------
B.AU.MBC200          --------------------
B.AU.MBC925          ----------------A---
B.AU.MBCC54          ----------------A---
B.AU.MBCC98          --------------------
B.AU.MBCD36          ---------Y------A--R
B.CN.RL42            ----------------A---
B.DE.D31             ----------------A---
B.DE.HAN             ----------------A---
B.FR.HXB2            --------------------
B.GA.OYI             ----------------A---
B.GB.CAM1            ----------------A---
B.GB.MANC            --------------------
B.NL.3202A21         ----------------A---
B.TW.LM49            ----------------A---
B.US.AD8             ----------------A---
B.US.BC              ----------------S---
B.US.DH123           ----------------A---
B.US.JRCSF           ----------------A---
B.US.JRFL            ----------------A---
B.US.MNCG            ----------------A---
B.US.NY5CG           ----------------A---
B.US.P896            ----------------A---
B.US.RF              ----------------A---
B.US.SF2             ----------------A---
B.US.WEAU160         ----------------A---
B.US.WR27            -----------x----A---
B.US.YU2             ----------------A---

CONSENSUS_C          --------------------
C.BR.92BR025         --------------------
C.BW.96BW01B03       --------------------
C.BW.96BW0402        -------------------R
C.BW.96BW0502        --------------------
C.BW.96BW1104        ------------------V-
C.BW.96BW1210        --------------------
C.BW.96BW15B03       --------------------
C.BW.96BW1626        --------------------
C.BW.96BW17A09       ----------------A---
C.ET.ETH2220         --------------------
C.IN.21068           --------------------
C.IN.301904          --------------------
C.IN.301905          --------------------
C.IN.301999          --------------------
C.IN.94IN11246       --------------------

CONSENSUS_D          --------------------
D.CD.84ZR085         --------------------
D.CD.ELI             ---N--ER------------
D.CD.NDK             ----------------A---
D.CD.Z2Z6            --------------------
D.UG.94UG1141        --------------------

CONSENSUS_F1         --------------------
F1.BE.VI850          --------------------
F1.BR.93BR020.1      --------------------
F1.FI.FIN9363        -------------x------
F1.FR.MP411          --------------------

CONSENSUS_F2         -------------------R
F2.CM.MP255          -------------------R
F2.CM.MP257          -------------------R
CONSENSUS_G          --------------------
G.BE.DRCBL           --------------------
G.FI.HH8793          --------------------
G.NG.92NG083         --------------------
G.SE.SE6165          --------------------

CONSENSUS_H          --------------------
H.BE.VI991           --------------------
H.BE.VI997           --------------------
H.CF.90CF056         -----------------N--
CONSENSUS_J          --------------------
J.SE.SE9173          --------------------
J.SE.SE9280          --------------------

CONSENSUS_K          --------------------
K.CD.EQTB11C         ---------------F----
K.CM.MP535           --------------------
N.CM.YBF30           -------------------R

CONSENSUS_O          -----?----------Q--R
O.CM.ANT70C          -----I----------Q--R
O.CM.MVP5180         ----------------Q--R
AC.ET.E3099G         ----------------A---
AC.IN.21301          --------------------
AC.RW.92RW009        ------------------V-
AC.SE.SE9488         ----------------A---
AC.ZM.ZAM184         ----------------A---
ACD.SE.SE8603        --------------------
AD.SE.SE6954         --------------------
AD.SE.SE7108         ----------------A---
ADU.CD.MAL           --------------------
AG.NG.G3             --------------------
AG.SE.SE7812         --------V--QVR--A---
AGHU.GA.VI354        ----------------S---
AGHU.NO.NOGIL3       --------------------
AGJ.AU.BFP90         --------------------
AGJ.ML.95ML8         --------------------
AGU.CD.Z321          --------------------
BF.BR.93BR029.4      ----------------A---
CRF01_AE.CF.90CF40   ----------------A---
CRF01_AE.TH.93TH25   ----------------A---
CRF01_AE.TH.CM240    ----------------A---
CRF01_AE.TH.TH022    --------------------
CRF01_AE.TH.TH047    ----------------A---
CRF02_AG.FR.DJ263    ----------------A---
CRF02_AG.FR.DJ264    ---------------FA---
CRF02_AG.NG.IBNG     ----------------A---
CRF03_AB.RU.KAL153   ----------------A---
CRF04_CPX.CY.94CY0   --------------------
CRF04_CPX.GR.97PVC   --------------------
CRF04_CPX.GR.97PVM   ----------------A---
DF.CD.VI961          --------------------
U.CD.VI1126          ----------R---------

CONSENSUS_CPZ        --------------------
CPZ.CD.CPZANT        --------------------
CPZ.GA.CPZGAB        -----I--------------
CPZ.US.CPZUS         --------------------
```

EVLKYWWNLLQYWSQELKSS

```
QUERY                EVLKYWWNLLQYWSQELKSS

CONSENSUS_A          -G---L----l--gr---i-
A.GB.MA246           -G---LG---L--GR--RI-
A.GB.MC108           -G---LG---S--GR---I-
A.KE.K89             -G---L----L--G----I-
A.KE.Q23-CXC-CG      -GI--L----S--GR---I-
A.NG.NG1935          QG---LG--V--------N-
A.RW.KIG93           -G---L----L--GR---I-
A.RW.SF1703          -G---L----L--GR---N-
A.SE.SE6594          -G---LG---L--GR---I-
A.SE.SE7253          -G---LG---L--G----L-
A.SE.SE7535          -G---L----L--GR----
A.SE.SE8131          .G---LG---L--IR---I-
A.SE.SE8538          -G---L----V--IR---I-
A.SE.SE8891          -G---LK---S--GR---L-
A.UG.92UG037         -G---LG---L--GR---I-
A.UG.U455            -G---L----L--GR---I-
A.UG.UG273A          -GI--L----LF-GR---I-
A.UG.UG275A          .G---L----A--GR---I-

CONSENSUS_B          -a----------------n-
B.AU.MBC18           -A-----------R---QK-
B.AU.MBC200          ------------------N-
B.AU.MBC925          -A----------------N-
B.AU.MBCC54          -A-----------G---QK-
B.AU.MBCC98          -A----------------K-
B.AU.MBCD36          -A--------K------QK-
B.BE.SIMI84          -I----------------N-
B.CN.RL42            ---R---------I----N-
B.DE.D31             ------------------N-
B.DE.HAN             ------------------N-
B.ES.89SP061         -A-----------I----N-
B.FR.HXB2            -A----------------N-
B.FR.PHI120          -A---L-------I----N-
B.FR.PHI133          -A---L------------K-
B.FR.PHI146          ----------P-R-----N-
B.FR.PHI153          -G----------------N-
B.FR.PHI159          -L----------R-------
B.FR.PIH155          -T----------------N-
B.FR.PIH160          GI---------------QK-
B.FR.PIH309          -I----G------G----N-
B.FR.PIH373          -I----------------N-
B.FR.PIH374          -A---L------------N-
B.GA.OYI             ------------------N-
B.GB.AC-46           -A--------R-------N-
B.GB.CAM1            -A---------------RN-
B.GB.GB8.C1          -A-----------I----N-
B.GB.JB              -I----------------N-
B.GB.M23470          ------------------N-
B.GB.M26864          -A-----------GK-----
B.GB.M30156          -I----------------K-
B.GB.M737677         -I-----------G---RN-
B.GB.M737685         -A----------------N-
B.GB.MANC            -I-------------V--N-
B.GB.MB314           -A---L------------N-
B.GB.WB              -A----------------N-
B.JP.ETR             -----L------------N-
B.JP.JH32            -A----------------N-
B.NL.3202A21         ------------------N-
B.NL.68A             -I----------------N-
B.NL.ENVVA           ----------H-------N-
B.NL.ENVVF           -----R-------G--I-N-
B.NL.ENVVG           ------------------N-
B.NL.H0320-2A12      -------------G--I-N-
B.TH.TH936705        -A-R--$------I----N-
B.TT.QZ4589          -A----GS----------Y-
B.TW.LM49            -A---L-------I----N-
B.US.85WCIPR54       ------------------N-
B.US.92US657.1       -I--------L-------N-
B.US.ADA             -----------------RN-
B.US.ALA1            ------------------N-
B.US.BC              -A-----S----------N-
B.US.BRVA            ------------------N-
B.US.C26-12.1BH      -I-----------G--I-N-
B.US.CDC452          ------------------N-
B.US.DH123           -L---L------------N-
B.US.ENVUS-R2        -I----------------N-
B.US.JRCSF           -I----------------N-
B.US.JRFL            ------------------N-
B.US.M02-3.SW        -A----G--I---I----K-
B.US.MNCG            --------------------
B.US.NC7             -A-----S----------N-
B.US.NL43E9          -A----------------N-
B.US.NY5CG           -A---C-------G----N-
B.US.P896            -A----------------N-
B.US.RF              -A----------------N-
B.US.SC              -A---------------RN-
B.US.SC141           -A----------$--K--N-
B.US.SC14C           -A----------------N-
B.US.SF128A          ------------------N-
B.US.SF2             -A-----S-----I----N-
B.US.SFMHS1          ------------------N-
B.US.SFMHS11         --------I---------N-
B.US.SFMHS16         -A----------------D-
B.US.SFMHS17         -I----------------N-
B.US.SFMHS18         -A-R--------------N-
B.US.SFMHS19         -L----------------N-
B.US.SFMHS2          -A----G-----------N-
B.US.SFMHS20         KI----------------N-
B.US.SFMHS21         GI-----S----------N-
B.US.SFMHS3          -A----------------N-
B.US.SFMHS4          ------------------N-
B.US.SFMHS5          -I----------------N-
B.US.SFMHS6          -A-----------G----N-
B.US.SFMHS7          -A----------------N-
B.US.SFMHS8          -A-----------G---QN-
B.US.SFMHS9          -A----------------RN-
B.US.US1             -A----------------T-
B.US.US2             -A----------------N-
B.US.US3             -A----------------N-
B.US.US4             -P------------------
B.US.WC001           ------------------N-
B.US.WEAU160         -A---C------------N-
B.US.WMJ22           -A------------K---N-
B.US.WR27            -I----G------G---RN-
B.US.YU2             G------------I----N-

CONSENSUS_C          -a---LGs-v---gl---k-
C.BI.BU910112        -I---LGS-V---GL---K-
C.BI.BU910213        -T---LGS-V----L---K-
C.BI.BU910316        -I---LG-IV---GL---R-
C.BI.BU910423        -I---LGS-V---GL---K-
C.BI.BU910518        -I---LGS-V---GL---K-
C.BI.BU910611        -I---LGS-V---GL---K-
C.BI.BU910717        -I---LGS-V---GL---K-
C.BI.BU910812        -I---LGS-V---GL---K-
C.BR.92BR025         -I---LGG-V----L---K-
C.BW.96BW01B03       -T---LG--VL--GL---K-
C.BW.96BW0402        -T--FLGS-V---GL---K-
C.BW.96BW0502        -A---LGS-V---GL---K-
C.BW.96BW11B01       -I---LGS-V---GL---M-
C.BW.96BW1210        -A---LGS-V---GL---K-
C.BW.96BW15B03       -A---LGS-V---GL---K-
C.BW.96BW16B01       -A---LGS-V---GL---K-
C.BW.96BW17B05       -A---LGS-G---G----K-
C.DJ.DJ259A          -T---LGS-V---GL---K-
C.DJ.DJ373A          -T---LGS-V---GL---K-
C.ET.ETH2220         -T---LGS-V---GL---K-
C.IN.21068           -A---LGS-V---GL---K-
C.IN.301904          -A---LGS-V---GL---K-
C.IN.301905          -G---LGS-V---GL---K-
C.IN.301999          -A---LGS-V---GI---R-
C.IN.94IN11246       -A---LGS-V---GL---K-
C.SN.SE364A          -I---LGS-A---GL-I-K-
C.SO.SM145A          -A---LG--G---GL---K-
C.UG.UG268A2         -A---LGS-V---G----K-

CONSENSUS_D          -ai--l-------i----N-
D.CD.84ZR085         -A---L--------R---N-
D.CD.ELI             DI---L-----------RN-
D.CD.JY1             -AI--L-S-----T----N-
D.CD.NDK             -A---L-----------RN-
D.CD.Z2Z6            -A---L--------R---N-
D.SN.SE365A2         -----L-S-----I-K--N-
D.TZ.87TZ4622        -TI--L-------I----N-
D.UG.92UG024D        -AI--L-------I----N-
D.UG.94UG1141        -AI--L-------I----N-
D.UG.C971-412        -AI--L-------I----N-
D.UG.UG266A2         -A-----------I----N-
D.UG.UG269A          -AI--L----K--I----N-
D.UG.UG274A2         KAI--L-------I----N-
D.UG.WHO15-474       -AIR-L-S--K--I----N-
F.BR.BZ126A          -A--LLG--TL--G----N-

CONSENSUS_F1         -a---Lg--t--------N-
F1.BE.VI850          -A---LG--TR-------N-
F1.BR.93BR020.1      -A---LG--T---G----N-
F1.FI.FIN9363        -A---LG-II--------N-
F1.FR.MP411          -T---L---A--------N-

CONSENSUS_F2         -?---L---?-?-G?---N-
```

```
F2.CM.MP255          -A---L---T-H-GR---N-
F2.CM.MP257          -----L---A---G----N-

CONSENSUS_G          -g---L----l--g----N-
G.BE.DRCBL           -A---L----L--AR---N-
G.FI.HH8793          -G---L----L--GR---N-
G.GA.LBV217          -G---L----L--G----N-
G.NG.92NG083         -G---L----L--GR---N-
G.NG.NG1928          -G---L----V--G----N-
G.NG.NG1929          -S---L----V--G----N-
G.NG.NG1937          -G---L----L--G----N-
G.NG.NG1939          -G---L----V-------N-
G.SE.SE6165          -G---L----L--GR---N-

CONSENSUS_H          -A---L-------G----N-
H.BE.VI991           -A--LLG---L--G----N-
H.BE.VI997           -A---L-------G----N-
H.CF.90CF056         -A---L-------G----N-

CONSENSUS_J          -I---LV--VW--G----N-
J.SE.SE9173          -I---LV--VW--G----N-
J.SE.SE9280          -I---LV--VW--G----N-

CONSENSUS_K          -A---L---??--?--?-N-
K.CD.EQTB11C         -A---L---IL--G--I-N-
K.CM.MP535           -A---L---V--------N-
N.CM.YBF30           -LRTHL-GI-A--GK--RD-

CONSENSUS_O          nacricaavt---l---qn-
O.CM.ANT70C          N-CRICAAVT---L---QN-
O.CM.CM4974          -ACRLCGAVT---L----T-
O.CM.HIV1CA9EN       NACRVCIAVI---L---QN-
O.CM.MVP5180         -ACRLCGAVM---L----N-
O.GA.VI686           SACRICAAVT-F-L---QN-
O.GQ.193HA           SACRVCAAVT---I---QN-
O.GQ.276HA           D-CRICAAVT---L---QN-
O.GQ.341HA           N-CRICAAVT---L---QN-
O.GQ.655HA           ....................
AC.IN.21301          -G---L----V--GR---I-
AC.RW.92RW009        -T---LG--V---GL---R-
AC.SE.SE9488         -G---L----L--GR--RI-
AC.ZM.ZAM174         -G--HL----L--G----N-
AC.ZM.ZAM184         -G--HL----L--G----N-
AC.ZM.ZAM716-3       -A--HL----L--G----N-
ACD.SE.SE8603        -AI--L-------I----N-
AD.KE.K124A2         -A---LG------TR---N-
AD.SE.SE6954         -A---L-------I----N-
AD.SE.SE7108         -A---L-------I----I-
AD.UG.C6080-10       -G---LK---A--GR---I-
AD.UG.UG/92/035      -G---LG---L--GR---I-
ADHU.NO.NOGIL3       -T---LG---L--G----N-
ADU.CD.MAL           -A---L-------G----N-
AG.GA.VI191A2        -A---L----L--GR---I-
AG.NG.G3             -G---L----L--GR---N-
AG.SE.SE7812         -A---L----S--G----N-
AGHU.GA.VI354        GA---L----L--G------
AGJ.AU.BFP90         -I---LG--IC--G---QN-
AGJ.ML.95ML84        -I---L---VC--G----N-
AGJ.NG.NG3670        -I---LG--VC--G----N-
AGU.CD.Z321          -T---LG--VI--G----N-
AU.NG.NG3678         QI---LG--V---G----T-
BF.BR.93BR029.4      -A--LLG--AL-------N-
CD.BI.BU910905       -T---LGS-V---GL---K-
CRF01_AE.CF.90CF402  -G---LG---S--V---RI-
CRF01_AE.TH.93TH253  -G---LG---L--G----I-
CRF01_AE.TH.A01021.  -G---LG---L--G----I-
CRF01_AE.TH.070703   -G---LK---I--G----I-
CRF01_AE.TH.070704   -G---LG---I-------I-
CRF01_AE.TH.070705   -G---LG---L--G----I-
CRF01_AE.TH.070707   -G---LG---L--G----I-
CRF01_AE.TH.070708   -G---LG---V--G----I-
CRF01_AE.TH.070709   -G---LG---L--G----Tx
CRF01_AE.TH.070710   -G---LG---L--G----I-
CRF01_AE.TH.070711   -G---LG---L--G----I-
CRF01_AE.TH.070713   -G---LG---A--G----I-
CRF01_AE.TH.CM240    -G---LG---L--G----I-
CRF01_AE.TH.E11429.  -G---LG---L--G----I-
CRF01_AE.TH.KH03     -G---LG---A-------T-
CRF01_AE.TH.KH08     -G---LG---A-------I-
CRF01_AE.TH.TH022    -G---L----V--G----I-
CRF01_AE.TH.TH047    -G---LG---L--G----I-
CRF01_AE.TH.TH92014  -G---LG---L--G----I-
CRF01_AE.TH.TH92111  -G---LG---L--G----I-
CRF02_AG.DJ.DJ258A   -A-Q-LG---L--G----N-
CRF02_AG.FR.DJ263    -A-Q-LG---L--G----N-
CRF02_AG.FR.DJ264    -A---LG---T--G----N-
CRF02_AG.NG.IBNG     GA---L---IS--V----N-
CRF02_AG.NG.NG1921   -A---LG---L--G----N-
CRF02_AG.NG.NG3675   -A--VLG---S--G----N-
CRF03_AB.RU.KAL1532  -A-----------I------
CRF03_AB.RU.KAL681   -A-----------I------
CRF03_AB.UA.UKR9700  -G---LG---G--G------
CRF04_cpx.CY.94CY03  -A---L--F-L--G----N-
CRF04_cpx.GR.97PVCH  -A---L----L--G---RN-
CRF04_cpx.GR.97PVMY  GT---L----L--G--IR--
DF.BE.VI961          -A---L-S----------N-
GH.GA.VI525          -A---L-------G----N-
GU.NG.NG3670         -I---LG--AL--G----N-
U.CD.VI1126          -I---L-S-V---G----N-

CONSENSUS_CPZ        -??????g?i?--??---?-
CPZ.CD.CPZANT        ....................
CPZ.GA.CPZGAB        -R-CLLGGII---GK---I-
CPZ.US.CPZUS         -LRARC-GVIA--AR---V-
```

LGQLQPSLQTGSEELRSLYN

```
QUERY                LGQLQPSLQTGSEELRSLYN

CONSENSUS_A          me----A-k--T--------
A.KE.Q23-CXC-CG      MEK---A-K--T--IK--F-
A.SE.SE6594          IE----A-N--T--IK--F-
A.SE.SE7253          ME---SA-K--T------F-
A.SE.SE7535          MK----A-K--T--------
A.SE.SE8131          IE---SAPK--T--------
A.SE.SE8538          I-----AFK--T---K----
A.SE.SE8891          MDK---A-R--T--------
A.UG.92UG037         ME---SA-R--T--------
A.UG.U455            ------A----T--------

CONSENSUS_B          --------------------
B.AU.AF128998        -V-------------K----
B.-.NL43E9           --------------------
B.AU.MBC18           ----H----------K-V--
B.AU.MBC200          --------K-----IK----
B.AU.MBC925          -R----A------DF-----
B.AU.MBCC54          ------A-------------
B.AU.MBCC98          -E----A------D---V--
B.AU.MBCD36          ----H-T-P------K----
B.CN.RL42            -E----A-----------F-
B.DE.D31             ------------------F-
B.DE.HAN             M-------------------
B.ES.89SP061         ------A-------------
B.FR.HXB2            --------------------
B.GA.OYI             --------K-----I-----
B.GB.CAM1            --------------------
B.GB.MANC            -V-------------K----
B.JP.JH31            ---------------K--F-
B.NL.3202A21         ------A-----------F-
B.TW.LM49            -----S--------------
B.US.85WCIPR54       ------A-----------H-
B.US.AD8             ---------------K--F-
B.US.BC              ---------------K----
B.US.DH123           --------------------
B.US.JRCSF           --------K------T----
B.US.JRFL            ----L-A-K-----------
B.US.MNCG            ---------------K----
B.US.NC7             -E------------------
B.US.NY5CG           -R------------R---F-
B.US.P896            -----S---------K----
B.US.RF              ------A--------K----
B.US.SF2             --------------------
B.US.WC001           ------A-----------H-
B.US.WEAU160         --------------------
B.US.WR27            -R----------------F-
B.US.YU2             --------------------

CONSENSUS_C          mk----A----T------?-
C.BR.92BR025         MK----A----TK--I--H-
C.BW.96BW01B22       MK----A----T---K----
C.BW.96BW0402        IQ----A----T------F-
C.BW.96BW0502        MK----A----T--------
C.BW.96BW1104        MK----A----T--I-----
C.BW.96BW1210        MK----A-K--T---K----
C.BW.96BW15B03       MK----A----T------F-
C.BW.96BW1626        MI-I--A-K--T---K----
C.BW.96BW17A09       IK----A----T---K----
C.ET.ETH2220         IK----A----T---K--F-
C.IN.93IN904         IK----A----T------H-
C.IN.93IN905         IK----A----T------F-
C.IN.93IN999         IK----A----T------H-
C.IN.94IN11246       MK----A----T------F-
C.IN.95IN21068       IK----A----T------F-

CONSENSUS_D          i-----ai------------
D.CD.84ZR085         ME----A-K--------I--
D.CD.ELI             I-----AI---T--------
D.CD.NDK             I------I------I-----
D.CD.Z2Z6            I-----AIR---------F-
D.UG.94UG1141        IR-----I------IK----

CONSENSUS_F          I-------------------
F.BR.BZ162           I-------------------
F.CD.VI174           I----T------------F-
F.RW.VI69            I-------------------

CONSENSUS_F1         Ir-------------?--?-
F1.BE.VI850          IR-------------K--F-
F1.BR.93BR020.1      I--------------K----
F1.FI.FIN9363        IA-I---I------------
F1.FR.MP411          IR----------------F-

CONSENSUS_F2         I----?---------K--?-
F2.CM.MP255          I----S---------K----
F2.CM.MP257          I--------------K--F-

CONSENSUS_G          MR----A-x--T--IK--F-
G.BE.DRCBL           MA----A----T--IK--F-
G.FI.HH8793          MS----AI---T--IK--F-
G.NG.92NG083         MK----A-$--T------F-
G.SE.SE6165          MR---------T--IK----

CONSENSUS_H          IE----AIK--T---Q--F-
H.BE.VI991           ------A-K--T-D-Q----
H.BE.VI997           IE--R--IK--T---x--F-
H.CF.90CF056         IE-I--AIK--T---K--F-

CONSENSUS_J          -V----A----T?-IK----
J.SE.SE9173          -V----A----T--IK----
J.SE.SE9280          -V----A----TQ-IK----

CONSENSUS_K          ir-------------?--?-
K.BE.VI325           IR-------------K--F-
K.CD.EQTB11C         IR----------------F-
K.CM.MP535           IT-I---I------IK----
N.CM.YBF30           -N--E-A-K-----------

CONSENSUS_O          -Q--E-A-K---??-?--W-
O.CM.ANT70C          -Q--E-A-K---DS-Q--W-
O.CM.MVP5180         -Q--E-A-K----D-K--W-
CRF01-AE.CF.90CF40   IE---STIK------K--F-
CRF01-AE.TH.93TH25   IE---ST-K------K----
CRF01-AE.TH.CM240    IE---ST-K--L---K--F-
CRF01-AE.TH.TH022    I----SN-K---------F-
CRF01-AE.TH.TH047    IE---ST-K---------F-
CRF02_AG.FR.DJ263    IE---TA-G------K----
CRF02_AG.FR.DJ264    MK---SA-G------K----
CRF02_AG.NG.IBNG     ME---SA-R------K--F-
CRF03_AB.RU.KAL15    -E----T-K------K----
CRF04_cpx.CY.94CY0   ME---ST-K-----------
CRF04_cpx.GR.97PVC   ME----T-R-----VK--F-
CRF04_cpx.GR.97PVM   ME---ST-K------K--F-
AC.ET.E3099G         ME---ST-K------K----
AC.IN.21301          IK----A----T------H-
AC.RW.92RW009        MR----A----TD-------
AC.SE.SE9488         -E----A-K--T--IK--F-
AC.ZM.ZAM174-21      -S----A----T------F-
AC.ZM.ZAM184         I-----A-P--T-DI-----
AC.ZM.ZAM716-17      IK----A----T------F-
ACD.SE.SE8603        MD----A-K--T--------
AD.SE.SE6954         M-----AI-------K--F-
AD.SE.SE7108         ME----AFK--T---K----
ADHU.NO.NOGIL3       ME----A-K------K--F-
ADU.CD.MAL           ME---ST-K-----IK----
AG.NG.G3             MR---------T--IK--F-
AG.SE.SE7812         ME---ST-R------K--F-
AGHU.GA.VI354        ME---SA-K------K--F-
AGJ.AU.BFP90         IE---ST-K------K--F-
AGJ.ML.95ML8         ME---ST-R------K----
AGU.CD.Z321          -S-F--A-K--T--II----
BF.BR.93BR029.4      -E----A-K-----------
DF.CD.VI961          IA----AI------------
U.CD.VI1126          IE-I--A-----------F-

CONSENSUS_CPZ        -?--e-a-k----g----F-
CPZ.CD.CPZANT        IH--S--IEIR-P-II--F-
CPZ.GA.CPZGAB        -Q--E-A-K----G----F-
CPZ.US.CPZUS         -K--E-A-K----G----F-
```

GSEELRSLYNTVATLYCVHQ

```
QUERY                GSEELRSLYNTVATLYCVHQ

CONSENSUS_A          -T------------------
A.KE.Q23-CXC-CG      -T--IK--F-----------
A.SE.SE6594          -T--IK--F-----------
A.SE.SE7253          -T------F----V------
A.SE.SE7535          -T------------------
A.SE.SE8131          -T------------------
A.SE.SE8538          -T---K---------W----
A.SE.SE8891          -T------------------
A.UG.92UG037         -T------------------
A.UG.U455            -T-----------V------

CONSENSUS_B          --------------------
B.AU.AF128998        -----K----A---------
B.-.NL43E9           -----------I-A------
B.AU.MBC18           -----K-V--A--V------
B.AU.MBC200          ----IK--------------
B.AU.MBC925          ---DF---------------
B.AU.MBCC54          --------------------
B.AU.MBCC98          ---D---V------------
B.AU.MBCD36          -----K-------V------
B.CN.RL42            --------F----------L
B.DE.D31             --------F-----------
B.DE.HAN             --------------------
B.ES.89SP061         --------------------
B.FR.HXB2            --------------------
B.GA.OYI             ----I---------------
B.GB.CAM1            --------------------
B.GB.MANC            -----K-------V------
B.JP.JH31            -----K--F-----------
B.NL.3202A21         --------F----V------
B.TW.LM49            -----------------I--
B.US.85WCIPR54       --------H----V------
B.US.AD8             -----K--F-----------
B.US.BC              -----K-----I-V------
B.US.DH123           -------------------E
B.US.JRCSF           -----T--------------
B.US.JRFL            --------------------
B.US.MNCG            -----K--------------
B.US.NC7             -----------I--------
B.US.NY5CG           ----R---F----V------
B.US.P896            -----K--------------
B.US.RF              -----K----A---------
B.US.SF2             --------------------
B.US.WC001           --------H----V------
B.US.WEAU160         -------------V------
B.US.WR27            --------F-----------
B.US.YU2             --------------------

CONSENSUS_C          -T------?----------?
C.BR.92BR025         -TK--I--H----------E
C.BW.96BW01B22       -T---K-------------E
C.BW.96BW0402        -T------F----------K
C.BW.96BW0502        -T----------------A
C.BW.96BW1104        -T--I--------------E
C.BW.96BW1210        -T---K-------------E
C.BW.96BW15B03       -T------F----------E
C.BW.96BW1626        -T---K-------V-F---A
C.BW.96BW17A09       -T---K--------------
C.ET.ETH2220         -T---K--F-----------
C.IN.93IN904         -T------H---V------A
C.IN.93IN905         -T------F----------A
C.IN.93IN999         -T------H----------E
C.IN.94IN11246       -T------F----------A
C.IN.95IN21068       -T------F----------A

CONSENSUS_D          -------------------e
D.CD.84ZR085         -------I-----------K
D.CD.ELI             -T-----------------K
D.CD.NDK             ----I-------------E
D.CD.Z2Z6            --------F----------E
D.UG.94UG1141        ----IK------V------E

CONSENSUS_F          -------------V--f---
F.BR.BZ162           -------------V--F---
F.CD.VI174           --------F--IVV--Y---
F.RW.VI69            -------------V--F---

CONSENSUS_F1         -----?--?--?-V--y---
F1.BE.VI850          -----K--F----V--Y---
F1.BR.93BR020.1      -----K-----I-V--Y---
F1.FI.FIN9363        -----------I-V--F---
F1.FR.MP411          --------F----V------

CONSENSUS_F2         -----K--?-??VV--Y---
F2.CM.MP255          -----K----A-VV--Y---
F2.CM.MP257          -----K--F--IVV--Y---

CONSENSUS_G          -T--IK--F-----------
G.BE.DRCBL           -T--IK--F-----------
G.FI.HH8793          -T--IK--F-----------
G.NG.92NG083         -T------F-----------
G.SE.SE6165          -T--IK----A---------

CONSENSUS_H          -T---Q--F----V------
H.BE.VI991           -T-D-Q-----I-V------
H.BE.VI997           -T---x--F---------L-
H.CF.90CF056         -T---K--F-L--V-----R

CONSENSUS_J          -T?-IK--------------
J.SE.SE9173          -T--IK--------------
J.SE.SE9280          -TQ-IK--------------

CONSENSUS_K          -----?--?----?------
K.BE.VI325           -----K--F---V-------
K.CD.EQTB11C         --------F-------W---
K.CM.MP535           ----IK-----I-V--F---
N.CM.YBF30           ----------AL-V-----S

CONSENSUS_O          --??-?--W-AI?V-W---N
O.CM.ANT70C          --DS-Q--W-AIVV-W---N
O.CM.MVP5180         ---D-K--W-AI-V-W---N
CRF01-AE.CF.90CF40   -----K--F--I---W----
CRF01-AE.TH.93TH25   -----K-----I---W----
CRF01-AE.TH.CM240    -L---K--F------W----
CRF01-AE.TH.TH022    --------F------W----
CRF01-AE.TH.TH047    --------F--IV--W----
CRF02_AG.FR.DJ263    -----K-----I---W---K
CRF02_AG.FR.DJ264    -----K-----I---W----
CRF02_AG.NG.IBNG     -----K--F--I---W----
CRF03_AB.RU.KAL15    -----K--------------
CRF04_cpx.CY.94CY0   -----------IT--W----
CRF04_cpx.GR.97PVC   ----VK--F--L---W----
CRF04_cpx.GR.97PVM   -----K--F-LI---W----
AC.ET.E3099G         -----K--------------
AC.IN.21301          -T------H----------A
AC.RW.92RW009        -TD-----------------
AC.SE.SE9488         -T--IK--F-----------
AC.ZM.ZAM174-21      -T------F--A-------E
AC.ZM.ZAM184         -T-DI--------V--Y---
AC.ZM.ZAM716-17      -T------F----------A
ACD.SE.SE8603        -T-------------W---K
AD.SE.SE6954         -----K--F----------A
AD.SE.SE7108         -T---K--------------
ADHU.NO.NOGIL3       -----K--F-L--V-W----
ADU.CD.MAL           ----IK--------------
AG.NG.G3             -T--IK--F-----------
AG.SE.SE7812         -----K--F--I---W----
AGHU.GA.VI354        -----K--F-----------
AGJ.AU.BFP90         -----K--F-----------
AGJ.ML.95ML8         -----K--------------
AGU.CD.Z321          -T--II--------------
BF.BR.93BR029.4      --------------------
DF.CD.VI961          -------------------E
U.CD.VI1126          --------F---V---W---

CONSENSUS_CPZ        ---g----F--l-V-W---s
CPZ.CD.CPZANT        R-P-II--F--ICV-W---K
CPZ.GA.CPZGAB        ---G----F--L-V-W-I-S
CPZ.US.CPZUS         ---G----F--L-V-W---S
```

MFSALSEGATPQDLNTMLNT

```
QUERY                MFSALSEGATPQDLNTMLNT

CONSENSUS_A          ---------------m---i
A.KE.Q23-CXC-CG      ---------------M---I
A.SE.SE6594          ---------------M---I
A.SE.SE7253          V--------------M---I
A.SE.SE7535          ---------------M---I
A.SE.SE8131          -----------H---M---I
A.SE.SE8538          -------------------I
A.SE.SE8891          -----------G---M---I
A.UG.92UG037         ---------------M---I
A.UG.U455            ---------------M---V

CONSENSUS_B          --------------------
B.AU.AF128998        --------------------
B.-.NL43E9           --------------------
B.AU.MBC18           --------------------
B.AU.MBC200          --------------------
B.AU.MBC925          --------------------
B.AU.MBCC54          --------------------
B.AU.MBCC98          --------------------
B.AU.MBCD36          --T-----------------
B.CN.RL42            --------------------
B.DE.D31             --------------------
B.DE.HAN             --------------------
B.ES.89SP061         --------------------
B.FR.HXB2            --------------------
B.GA.OYI             -----A--------------
B.GB.CAM1            --------------------
B.GB.MANC            ---------I----------
B.JP.JH31            --------------------
B.NL.3202A21         --------------------
B.TW.LM49            --------------------
B.US.85WCIPR54       --------------------
B.US.AD8             --------------------
B.US.BC              --------------------
B.US.DH123           --------------------
B.US.JRCSF           --------------------
B.US.JRFL            --------------------
B.US.MNCG            --------------------
B.US.NC7             --------------------
B.US.NY5CG           --------------------
B.US.P896            --------------------
B.US.RF              --------------------
B.US.SF2             --------------------
B.US.WC001           --------------------
B.US.WEAU160         --------------------
B.US.WR27            --------------Y-----
B.US.YU2             --------------------

CONSENSUS_C          --T-----------------
C.BR.92BR025         --T-----------------
C.BW.96BW01B22       --T-----------------
C.BW.96BW0402        --T-----------------
C.BW.96BW0502        --T-----------------
C.BW.96BW1104        --T---------------T-
C.BW.96BW1210        --T-----------------
C.BW.96BW15B03       --T-----------------
C.BW.96BW1626        --T-----------------
C.BW.96BW17A09       --T-----------------
C.ET.ETH2220         --T-----------------
C.IN.93IN904         --T-----------------
C.IN.93IN905         --T-----------------
C.IN.93IN999         --T-----------------
C.IN.94IN11246       --T-----------------
C.IN.95IN21068       --T-----------------
CONSENSUS_D          --------------------
D.CD.84ZR085         --------------------
D.CD.ELI             --------------------
D.CD.NDK             --------------------
D.CD.Z2Z6            --------------------
D.UG.94UG1141        --------------------
CONSENSUS_F          --------------------
F.BR.BZ162           --------------------
F.CD.VI174           --------------------
F.RW.VI69            --------------------

CONSENSUS_F1         --------------------
F1.BE.VI850          -----------T--------
F1.BR.93BR020.1      --------------------
F1.FI.FIN9363        --------------------
F1.FR.MP411          --------------------
CONSENSUS_F2         --------------------
F2.CM.MP255          --------------------
F2.CM.MP257          --------------------

CONSENSUS_G          -----------------xx-
G.BE.DRCBL           --T-----------------
G.FI.HH8793          --------------------
G.NG.92NG083         --------------------
G.SE.SE6165          ---------------L----

CONSENSUS_H          ---------------A----
H.BE.VI991           ---------------A----
H.BE.VI997           ---------------A----
H.CF.90CF056         ---------------A----
CONSENSUS_J          --------------------
J.SE.SE9173          --------------------
J.SE.SE9280          --------------------

CONSENSUS_K          --------------------
K.BE.VI325           -----AD-------------
K.CD.EQTB11C         --------------------
K.CM.MP535           --T-----------------
N.CM.YBF30           --M--------S--------

CONSENSUS_O          --M------??Y-I-----A
O.CM.ANT70C          --M------ISY-I-----A
O.CM.MVP5180         --M------V-Y-I-----A
CRF01-AE.CF.90CF40   ---------------M---I
CRF01-AE.TH.93TH25   ---------------M---I
CRF01-AE.TH.CM240    ---------------M---I
CRF01-AE.TH.TH022    ---------------M---I
CRF01-AE.TH.TH047    ---------------M---I
CRF02_AG.FR.DJ263    --T------------M---I
CRF02_AG.FR.DJ264    --T------------M---I
CRF02_AG.NG.IBNG     ---------------M---I
CRF03_AB.RU.KAL15    ---------------M---I
CRF04_cpx.CY.94CY0   ---------------M---I
CRF04_cpx.GR.97PVC   ---------------M---I
CRF04_cpx.GR.97PVM   ---------------M---I
AC.ET.E3099G         --------------------
AC.IN.21301          --T-----------------
AC.RW.92RW009        --T-----------------
AC.SE.SE9488         --T-----------------
AC.ZM.ZAM174-21      --T-----------------
AC.ZM.ZAM184         --------------------
AC.ZM.ZAM716-17      --T-----------------
ACD.SE.SE8603        ---------------M---I
AD.SE.SE6954         ---------A--------S-
AD.SE.SE7108         ---------------M---I
ADHU.NO.NOGIL3       ------D--------M---I
ADU.CD.MAL           ---------------M---I
AG.NG.G3             --T-----------------
AG.SE.SE7812         ---------------M---I
AGHU.GA.VI354        ---------------M---I
AGJ.AU.BFP90         --T------------M---I
AGJ.ML.95ML8         ---------------M---I
AGU.CD.Z321          --------------------
BF.BR.93BR029.4      --------------------
DF.CD.VI961          --T-----------------
U.CD.VI1126          --T-----------------

CONSENSUS_CPZ        -------------v-----A
CPZ.CD.CPZANT        -----------H-------A
CPZ.GA.CPZGAB        ---------L---V-----A
CPZ.US.CPZUS         --M----------V-----A
```

Study Subject ID:00RCH85
Study Subject Clone:
Study Subject HLA:A30,B42,Cw17
Sequence: Known reactive 20Mer0: FNLPPVVAKEIVASCDKCQL Integrase(26–45)

Possible HLA

A30	A*3001,A*3002,A*3003,A*3004
B42	B*4201,B*4202

Possible Epitopes based on anchor residues

Anchor Residues Searched

Study Subject ID:00RCH85
Study Subject Clone:
Study Subject HLA:A30,B42,Cw17
Sequence: Known reactive 20Mer1: EWRFDSRLAFHHVARELHPE Nef(182–201)

Possible HLA

A30	A*3001,A*3002,A*3003,A*3004
B42	B*4201,B*4202

Possible Epitopes based on anchor residues

Anchor Residues Searched

Study Subject ID:00RCH85
Study Subject Clone:
Study Subject HLA:A30,B42,Cw17
Sequence: Known reactive 20Mer2: YNVLPQGWKGSPAIFQSSMT RT(146–165)

Possible HLA

A30	A*3001,A*3002,A*3003,A*3004
B42	B*4201,B*4202

Possible Epitopes based on anchor residues

Anchor Residues Searched

Study Subject ID:00RCH85
Study Subject Clone:
Study Subject HLA:A30,B42,Cw17
Sequence: Known reactive 20Mer3: SPAIFQSSMTKILEPFRKQN RT(156–175)

Possible HLA

A30	A*3001,A*3002,A*3003,A*3004
B42	B*4201,B*4202

Possible Epitopes based on anchor residues

Anchor Residues Searched

Study Subject ID:00RCH85
Study Subject Clone:
Study Subject HLA:A30,B42,Cw17
Sequence: Known reactive 20Mer4: KILEPFRKQNPDIVIYQYMD RT(166–185)

Possible HLA

A30	A*3001,A*3002,A*3003,A*3004
B42	B*4201,B*4202

Possible Epitopes based on anchor residues

Anchor Residues Searched

Study Subject ID:00RCH85
Study Subject Clone:
Study Subject HLA:A30,B42,Cw17
Sequence: Known reactive 20Mer5: DIQKLVGKLNWASQIYPGIK RT(256–275)

Possible HLA

A30	A*3001,A*3002,A*3003,A*3004
B42	B*4201,B*4202

Possible Epitopes based on anchor residues

Anchor Residues Searched

Study Subject ID:00RCH85
Study Subject Clone:
Study Subject HLA:A30,B42,Cw17
Sequence: Known reactive 20Mer6: EVLKYWWNLLQYWSQELKSS gp160(791–810)

Possible HLA

A30	A*3001,A*3002,A*3003,A*3004
B42	B*4201,B*4202

Possible Epitopes based on anchor residues

Anchor Residues Searched

Study Subject ID:00RCH85
Study Subject Clone:
Study Subject HLA:A30,B42,Cw17
Sequence: Known reactive 20Mer7: LGQLQPSLQTGSEELRSLYN p17(61–80)

Possible HLA

A30	A*3001,A*3002,A*3003,A*3004
B42	B*4201,B*4202

Possible Epitopes based on anchor residues

Anchor Residues Searched

Study Subject ID:00RCH85
Study Subject Clone:
Study Subject HLA:A30,B42,Cw17
Sequence: Known reactive 20Mer8: GSEELRSLYNTVATLYCVHQ p17(71–90)

Possible HLA

A30	A*3001,A*3002,A*3003,A*3004
B42	B*4201,B*4202

Possible Epitopes based on anchor residues

Anchor Residues Searched

Study Subject ID:00RCH85
Study Subject Clone:
Study Subject HLA:A30,B42,Cw17
Sequence: Known reactive 20Mer9: MFSALSEGATPQDLNTMLNT p24(39–58)

Possible HLA

A30	A*3001,A*3002,A*3003,A*3004
B42	B*4201,B*4202

Possible Epitopes based on anchor residues

Anchor Residues Searched

This table lists epitopes that are experimentally observed to be presented by a HLA type carried by the patient, but the de£ned epitope has substitutions relative to the peptides from your reference strains and so might be missed by your reagents: in HXB2 for Gag, Pol; MN for Env; BRU for Nef, relative to most B clade Sequences in the database:

Protein	Epitope in Database	Epitope in Ref. strain	Epitope in Consensus B	HLA	Notes
gp160(704–712)	IVNRNRQGY	IVNRVRQGY	IVNRVRQGY	A*3002	
gp160(794–802)	KYCWNLLQY	KYWWNLLQY	KYWWNLLQY	A*3002	

Table 1: **gp160**

HXB2 Location	Author Location	Sequence	Immunogen	Species(HLA)	References
gp160(704–712)	gp160(704–712 LAI)	IVNRNRQGY		human(A*3002)	[Brander & Goulder(2001), Goulder (2001)]
	• C. Brander notes this is an A*3002 epitope				
gp160(794–802)	gp160(794–802 LAI)	KYCWNLLQY		human(A*3002)	[Brander & Goulder(2001), Goulder (2001)]
	• C. Brander notes this is an A*3002 epitope				

Table 2: **All De£ned Epitopes within the 20mer, regardless of HLA type**

HXB2 Location	Author Location	Sequence	Immunogen	Species(HLA)	References
Integrase(28–36)	Pol(743–751 SF2)	LPPVVAKEI	HIV-1 infection	human(B*5101)	[Tomiyama (1999)]

- HLA-B27, -B51, and -B57 are associated with slow progression to AIDS, while HLA-B35, -B8, -B24 are associated with a rapid progression to AIDS (Nat. Med. 2:405, 1996;Lancet 22:1187, 1986;Hum Immunol 22:73, 1988;Hum Immunol 44:156, 1995)
- 15% of Japanese populations carry HLA-B51 while HLA-B27 and -B57 are detected in less than 0.3%
- Of the 172 HIV-1 peptides with HLA-B*5101 anchor residues, 33 bound to HLA-B*5101, seven of these peptides were reactive with CTL from 3 B*5101 positive individuals, and six were properly processed
- Four of the six epitopes were highly conserved among B subtype sequences – LPPVVAKEI is highly conserved

Table 3: **All De£ned Epitopes within the 20mer, regardless of HLA type**

HXB2 Location	Author Location	Sequence	Immunogen	Species(HLA)	References
Integrase(28–36)	Pol(743–751 SF2)	LPPVVAKEI	HIV-1 infection	human(B*5101)	[Tomiyama (1999)]

- HLA-B27, -B51, and -B57 are associated with slow progression to AIDS, while HLA-B35, -B8, -B24 are associated with a rapid progression to AIDS (Nat. Med. 2:405, 1996;Lancet 22:1187, 1986;Hum Immunol 22:73, 1988;Hum Immunol 44:156, 1995)
- 15% of Japanese populations carry HLA-B51 while HLA-B27 and -B57 are detected in less than 0.3%
- Of the 172 HIV-1 peptides with HLA-B*5101 anchor residues, 33 bound to HLA-B*5101, seven of these peptides were reactive with CTL from 3 B*5101 positive individuals, and six were properly processed
- Four of the six epitopes were highly conserved among B subtype sequences – LPPVVAKEI is highly conserved

Table 4: **All De£ned Epitopes within the 20mer, regardless of HLA type**

HXB2 Location	Author Location	Sequence	Immunogen	Species(HLA)	References
Integrase(28–36)	Pol(743–751 SF2)	LPPVVAKEI	HIV-1 infection	human(B*5101)	[Tomiyama (1999)]
	• HLA-B27, -B51, and -B57 are associated with slow progression to AIDS, while HLA-B35, -B8, -B24 are associated with a rapid progression to AIDS (Nat. Med. 2:405, 1996;Lancet 22:1187, 1986;Hum Immunol 22:73, 1988;Hum Immunol 44:156, 1995) • 15% of Japanese populations carry HLA-B51 while HLA-B27 and -B57 are detected in less than 0.3% • Of the 172 HIV-1 peptides with HLA-B*5101 anchor residues, 33 bound to HLA-B*5101, seven of these peptides were reactive with CTL from 3 B*5101 positive individuals, and six were properly processed • Four of the six epitopes were highly conserved among B subtype sequences – LPPVVAKEI is highly conserved				

Table 5: **All De£ned Epitopes within the 20mer, regardless of HLA type**

HXB2 Location	Author Location	Sequence	Immunogen	Species(HLA)	References
Integrase(28–36)	Pol(743–751 SF2)	LPPVVAKEI	HIV-1 infection	human(B*5101)	[Tomiyama (1999)]

- HLA-B27, -B51, and -B57 are associated with slow progression to AIDS, while HLA-B35, -B8, -B24 are associated with a rapid progression to AIDS (Nat. Med. 2:405, 1996;Lancet 22:1187, 1986;Hum Immunol 22:73, 1988;Hum Immunol 44:156, 1995)
- 15% of Japanese populations carry HLA-B51 while HLA-B27 and -B57 are detected in less than 0.3%
- Of the 172 HIV-1 peptides with HLA-B*5101 anchor residues, 33 bound to HLA-B*5101, seven of these peptides were reactive with CTL from 3 B*5101 positive individuals, and six were properly processed
- Four of the six epitopes were highly conserved among B subtype sequences – LPPVVAKEI is highly conserved

Table 6: **All De£ned Epitopes within the 20mer, regardless of HLA type**

HXB2 Location	Author Location	Sequence	Immunogen	Species(HLA)	References
Integrase(28–36)	Pol(743–751 SF2)	LPPVVAKEI	HIV-1 infection	human(B*5101)	[Tomiyama (1999)]
	• HLA-B27, -B51, and -B57 are associated with slow progression to AIDS, while HLA-B35, -B8, -B24 are associated with a rapid progression to AIDS (Nat. Med. 2:405, 1996;Lancet 22:1187, 1986;Hum Immunol 22:73, 1988;Hum Immunol 44:156, 1995) • 15% of Japanese populations carry HLA-B51 while HLA-B27 and -B57 are detected in less than 0.3% • Of the 172 HIV-1 peptides with HLA-B*5101 anchor residues, 33 bound to HLA-B*5101, seven of these peptides were reactive with CTL from 3 B*5101 positive individuals, and six were properly processed • Four of the six epitopes were highly conserved among B subtype sequences – LPPVVAKEI is highly conserved				

Table 7: **All De£ned Epitopes within the 20mer, regardless of HLA type**

HXB2 Location	Author Location	Sequence	Immunogen	Species(HLA)	References
Integrase(28–36)	Pol(743–751 SF2)	LPPVVAKEI	HIV-1 infection	human(B*5101)	[Tomiyama (1999)]
	• HLA-B27, -B51, and -B57 are associated with slow progression to AIDS, while HLA-B35, -B8, -B24 are associated with a rapid progression to AIDS (Nat. Med. 2:405, 1996;Lancet 22:1187, 1986;Hum Immunol 22:73, 1988;Hum Immunol 44:156, 1995) • 15% of Japanese populations carry HLA-B51 while HLA-B27 and -B57 are detected in less than 0.3% • Of the 172 HIV-1 peptides with HLA-B*5101 anchor residues, 33 bound to HLA-B*5101, seven of these peptides were reactive with CTL from 3 B*5101 positive individuals, and six were properly processed • Four of the six epitopes were highly conserved among B subtype sequences – LPPVVAKEI is highly conserved				

Table 8: **All De£ned Epitopes within the 20mer, regardless of HLA type**

HXB2 Location	Author Location	Sequence	Immunogen	Species(HLA)	References
Integrase(28–36)	Pol(743–751 SF2)	LPPVVAKEI	HIV-1 infection	human(B*5101)	[Tomiyama (1999)]
	• HLA-B27, -B51, and -B57 are associated with slow progression to AIDS, while HLA-B35, -B8, -B24 are associated with a rapid progression to AIDS (Nat. Med. 2:405, 1996;Lancet 22:1187, 1986;Hum Immunol 22:73, 1988;Hum Immunol 44:156, 1995) • 15% of Japanese populations carry HLA-B51 while HLA-B27 and -B57 are detected in less than 0.3% • Of the 172 HIV-1 peptides with HLA-B*5101 anchor residues, 33 bound to HLA-B*5101, seven of these peptides were reactive with CTL from 3 B*5101 positive individuals, and six were properly processed • Four of the six epitopes were highly conserved among B subtype sequences – LPPVVAKEI is highly conserved				

Table 9: **All De£ned Epitopes within the 20mer, regardless of HLA type**

HXB2 Location	Author Location	Sequence	Immunogen	Species(HLA)	References
Integrase(28–36)	Pol(743–751 SF2)	LPPVVAKEI	HIV-1 infection	human(B*5101)	[Tomiyama (1999)]
	• HLA-B27, -B51, and -B57 are associated with slow progression to AIDS, while HLA-B35, -B8, -B24 are associated with a rapid progression to AIDS (Nat. Med. 2:405, 1996;Lancet 22:1187, 1986;Hum Immunol 22:73, 1988;Hum Immunol 44:156, 1995) • 15% of Japanese populations carry HLA-B51 while HLA-B27 and -B57 are detected in less than 0.3% • Of the 172 HIV-1 peptides with HLA-B*5101 anchor residues, 33 bound to HLA-B*5101, seven of these peptides were reactive with CTL from 3 B*5101 positive individuals, and six were properly processed • Four of the six epitopes were highly conserved among B subtype sequences – LPPVVAKEI is highly conserved				

Table 10: **All De£ned Epitopes within the 20mer, regardless of HLA type**

HXB2 Location	Author Location	Sequence	Immunogen	Species(HLA)	References
Integrase(28–36)	Pol(743–751 SF2)	LPPVVAKEI	HIV-1 infection	human(B*5101)	[Tomiyama (1999)]
	• HLA-B27, -B51, and -B57 are associated with slow progression to AIDS, while HLA-B35, -B8, -B24 are associated with a rapid progression to AIDS (Nat. Med. 2:405, 1996;Lancet 22:1187, 1986;Hum Immunol 22:73, 1988;Hum Immunol 44:156, 1995) • 15% of Japanese populations carry HLA-B51 while HLA-B27 and -B57 are detected in less than 0.3% • Of the 172 HIV-1 peptides with HLA-B*5101 anchor residues, 33 bound to HLA-B*5101, seven of these peptides were reactive with CTL from 3 B*5101 positive individuals, and six were properly processed • Four of the six epitopes were highly conserved among B subtype sequences – LPPVVAKEI is highly conserved				

Table 11: **All De£ned Epitopes within the 20mer, regardless of HLA type**

HXB2 Location	Author Location	Sequence	Immunogen	Species(HLA)	References
Integrase(28–36)	Pol(743–751 SF2)	LPPVVAKEI	HIV-1 infection	human(B*5101)	[Tomiyama (1999)]
	• HLA-B27, -B51, and -B57 are associated with slow progression to AIDS, while HLA-B35, -B8, -B24 are associated with a rapid progression to AIDS (Nat. Med. 2:405, 1996;Lancet 22:1187, 1986;Hum Immunol 22:73, 1988;Hum Immunol 44:156, 1995) • 15% of Japanese populations carry HLA-B51 while HLA-B27 and -B57 are detected in less than 0.3% • Of the 172 HIV-1 peptides with HLA-B*5101 anchor residues, 33 bound to HLA-B*5101, seven of these peptides were reactive with CTL from 3 B*5101 positive individuals, and six were properly processed • Four of the six epitopes were highly conserved among B subtype sequences – LPPVVAKEI is highly conserved				

p17 CTL Map

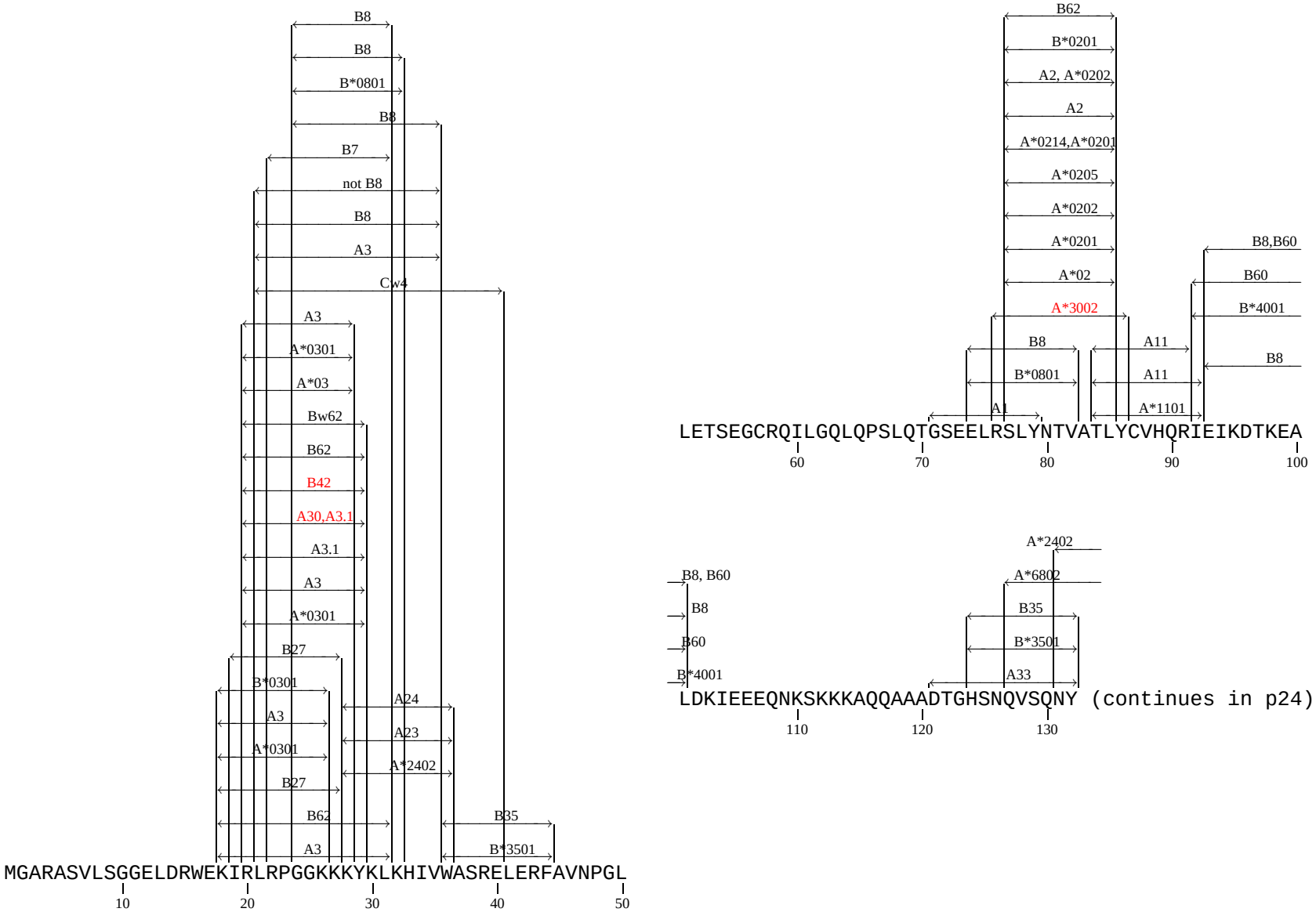
B8
B8
B*0801
B8
B7
not B8
B8
A3
Cw4
A3
A*0301
A*03
Bw62
B62
B42
A30,A3.1
A3.1
A3
A*0301
B27
B*0301
A3
A*0301
B27
B62
A3
A24
A23
A*2402
B35
B*3501
MGARASVLSGGELDRWEKIRLRPGGKKKYKLKHIVWASRELERFAVNPGL
10
20
30
40
50
B62
B*0201
A2, A*0202
A2
A*0214,A*0201
A*0205
A*0202
A*0201
A*02
A*3002
B8
B*0801
A1
A11
A11
A*1101
B8,B60
B60
B*4001
B8
LETSEGCRQILGQLQPSLQTGSEELRSLYNTVATLYCVHQRIEIKDTKEA
60
70
80
90
100
A*2402
B8, B60
A*6802
B8
B35
B60
B*3501
B*4001
A33
LDKIEEEQNKSKKKAQQAAADTGHSNQVSQNY (continues in p24)
110
120
130

p24 CTL Map

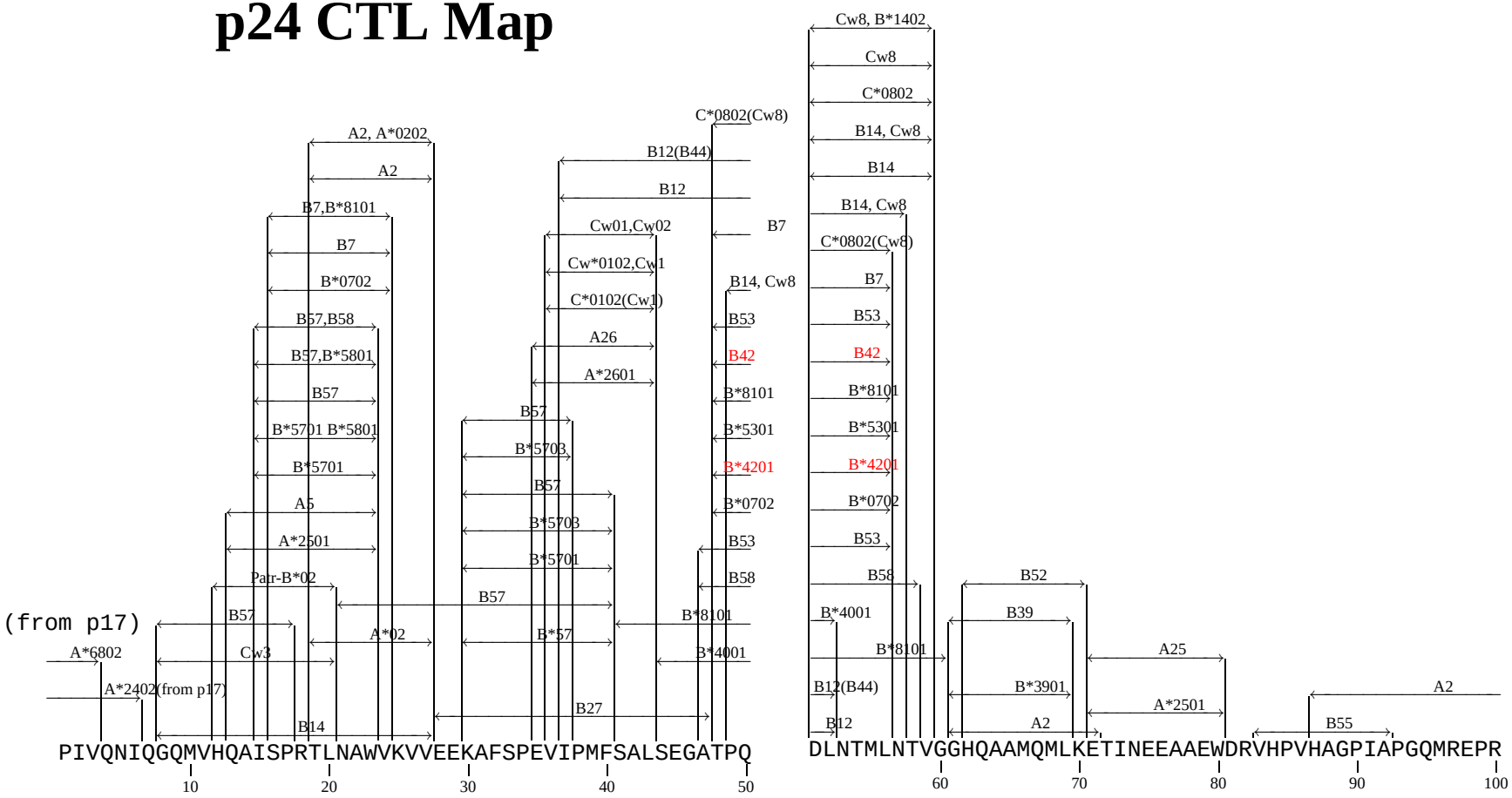

(from p17)
A*6802
A*2402(from p17)
B57
Cw3
B14
Patr-B*02
A5
A*2501
B57,B58
B57,B*5801
B57
B*5701 B*5801
B*5701
B7,B*8101
B7
B*0702
A2, A*0202
A2
A*02
B57
B*5703
B57
B*5703
B*5701
B57
B*57
B27
Cw01,Cw02
Cw*0102,Cw1
C*0102(Cw1)
A26
A*2601
B12(B44)
B12
B7
B14, Cw8
B53
B42
B*8101
B*5301
B*4201
B*0702
B53
B58
B*8101
B*4001
C*0802(Cw8)
PIVQNIQGQMVHQAISPRTLNAWVKVVEEKAFSPEVIPMFSALSEGATPQ
10
20
30
40
50
Cw8, B*1402
Cw8
C*0802
B14, Cw8
B14
B14, Cw8
C*0802(Cw8)
B7
B53
B42
B*8101
B*5301
B*4201
B*0702
B53
B58
B*4001
B*8101
B12(B44)
B12
B52
B39
B*3901
A2
A25
A*2501
A2
B55
DLNTMLNTVGGHQAAMQMLKETINEEAAEWDRVHPVHAGPIAPGQMREPR
60
70
80
90
100

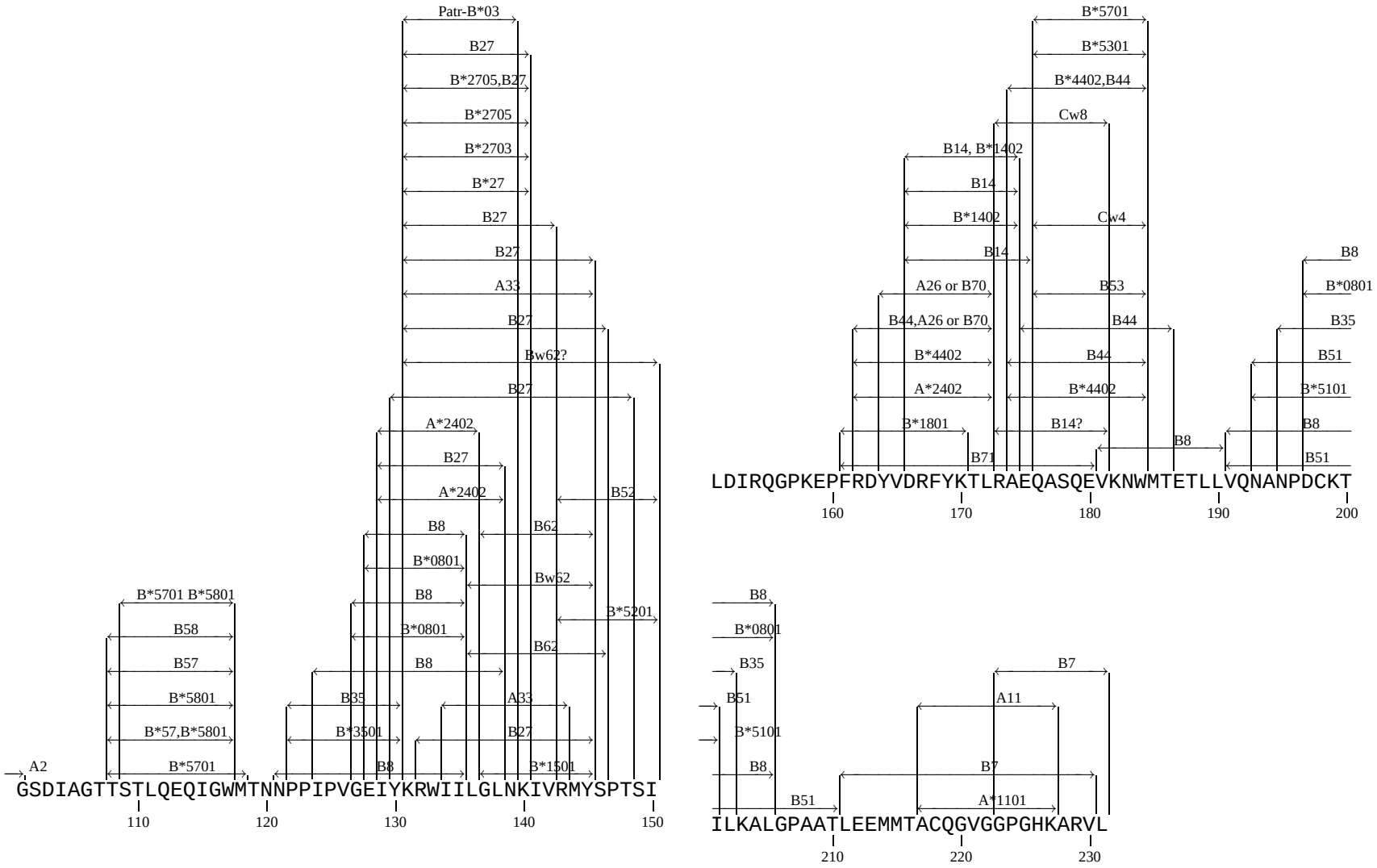
Patr-B*03
B27
B*2705,B27
B*2705
B*2703
B*27
B27
B27
A33
B27
Bw62?
B27
A*2402
B27
A*2402
B52
B8
B62
B*0801
Bw62
B8
B*5201
B*0801
B62
B8
B35
A33
B*3501
B27
B8
B*1501
B*5701 B*5801
B58
B57
B*5801
B*57,B*5801
A2
B*5701
GSDIAGTTSTLQEQIGWMTNNPPIPVGEIYKRWIILGLNKIVRMYSPTSI
110
120
130
140
150
B*5701
B*5301
B*4402,B44
Cw8
B14, B*1402
B14
B*1402
Cw4
B14
A26 or B70
B53
B44,A26 or B70
B44
B*4402
B44
A*2402
B*4402
B*1801
B14?
B71
B8
B8
B*0801
B35
B51
B*5101
B8
B51
LDIRQGPKEPFRDYVDRFYKTLRAEQASQEVKNWMTETLLVQNANPDCKT
160
170
180
190
200
B8
B*0801
B35
B51
B*5101
B8
B51
B7
A11
B7
A*1101
ILKALGPAATLEEMMTACQGVGGPGHKARVL
210
220
230

p2p7p1p6 CTL Map

```
AEAMSQVTNSATIMMQRGNFRNQRKIVKCFNCGKEGHTARNCRAPRKKGC
          10         20         30         40         50

 p2 <-          <>
start      p2 end  p7 start

                A2                          A2
WKCGKEGHQMKDCTERQANFLGKIWPSYKGRPGNFLQSRPEPTAPPEESF
          60         70         80         90        100

                <>                  <>
            p7 end  p1 start     p1  p6 start
                                end

                          B7
RSGVETTTPPQKQEPIDKELYPLTSLRSLFGNDPSSQ
         110        120        130

                          p6 end ->
```

Protease CTL Map

```
A*7401
A*6802,A*7401,A19
A*6802                                A*6802
PQVTLWQRPLVTIKIGGQLKEALLDTGADDTVLEEMSLPGRWKPKMIGGI
          10         20         30         40         50

                                A*0201
GGFIKVRQYDQILIEICGHKAIGTVLVGPTPVNIIGRNLLTQIGCTLNF
          60         70         80         90
```

RT CTL Map

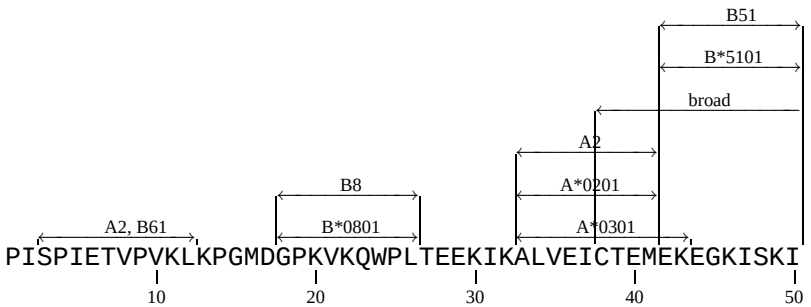
B51
B*5101
broad
A2
B8
A*0201
A2, B61
B*0801
A*0301
PISPIETVPVKLKPGMDGPKVKQWPLTEEKIKALVEICTEMEKEGKISKI
10
20
30
40
50

Cw4
broad
A3
GPENPYNTPVFAIKKKDSTKWRKLVDFRELNKRTQDFWEVQLGIPHPAGL
60
70
80
90
100

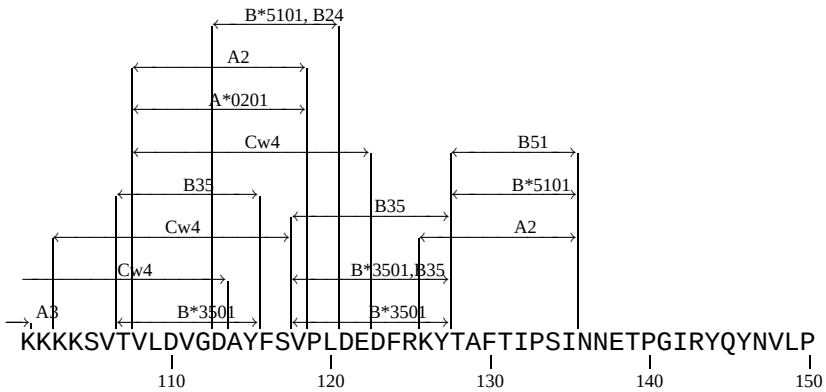
B*5101, B24
A2
A*0201
Cw4
B51
B35
B*5101
B35
Cw4
A2
Cw4
B*3501,B35
A3
B*3501
B*3501
KKKKSVTVLDVGDAYFSVPLDEDFRKYTAFTIPSINNETPGIRYQYNVLP
110
120
130
140
150

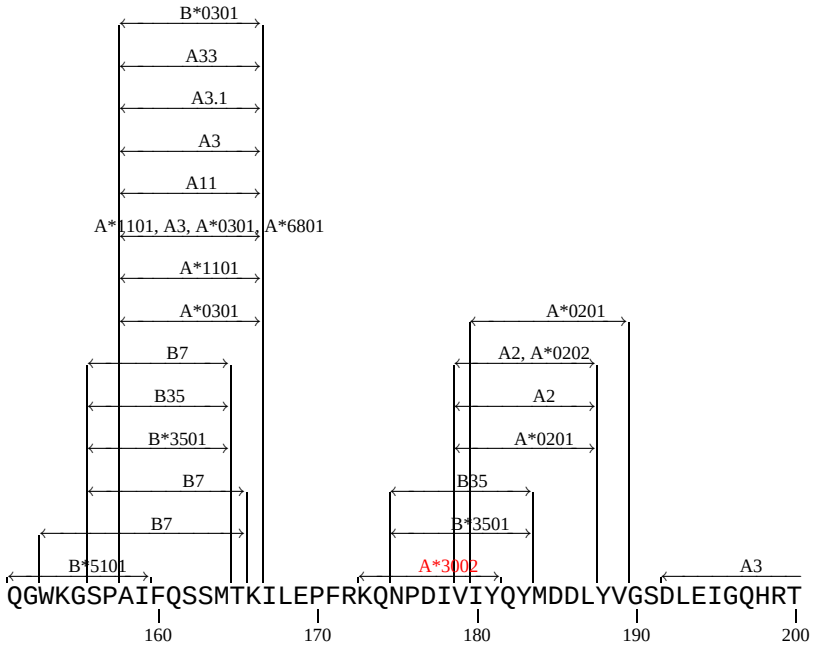
B*0301
A33
A3.1
A3
A11
A*1101, A3, A*0301, A*6801
A*1101
A*0301
A*0201
B7
A2, A*0202
B35
A2
B*3501
A*0201
B7
B35
B7
B*3501
B*5101
A*3002
A3
QGWKGSPAIFQSSMTKILEPFRKQNPDIVIYQYMDDLYVGSDLEIGQHRT
160
170
180
190
200

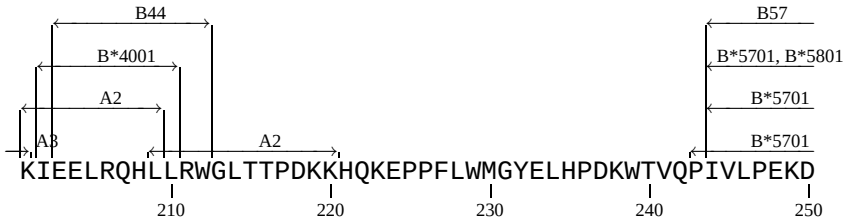
B44
B57
B*4001
B*5701, B*5801
A2
B*5701
A3
A2
B*5701
KIEELRQHLLRWGLTTPDKKHQKEPPFLWMGYELHPDKWTVQPIVLPEKD
210
220
230
240
250

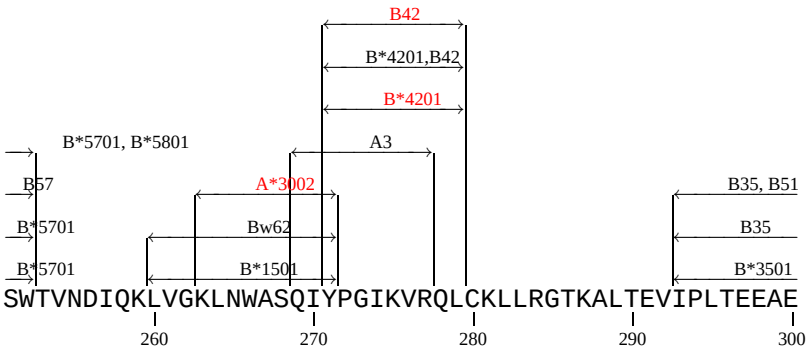

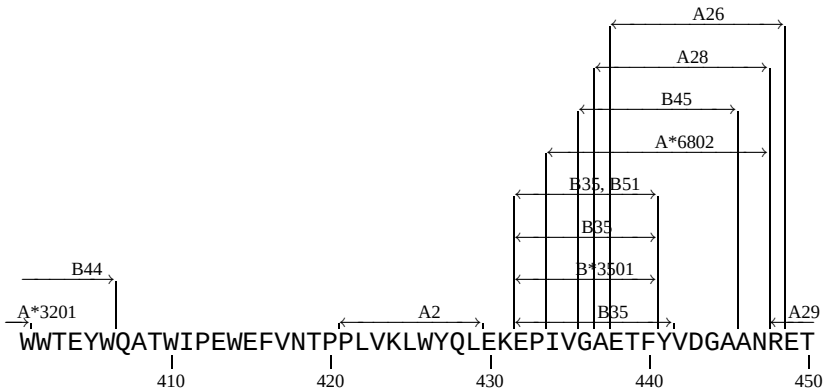

p15 RNase start <-

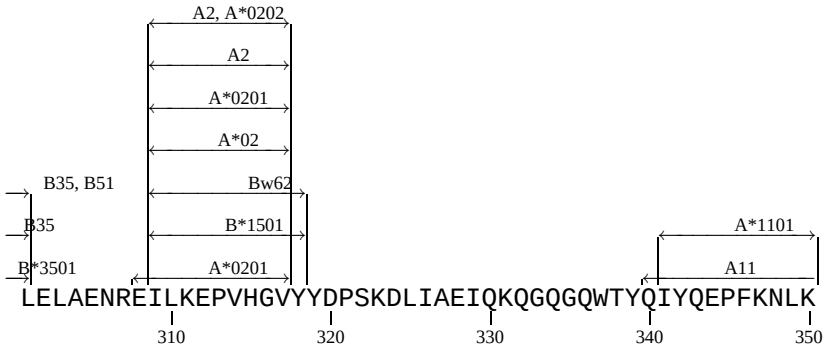

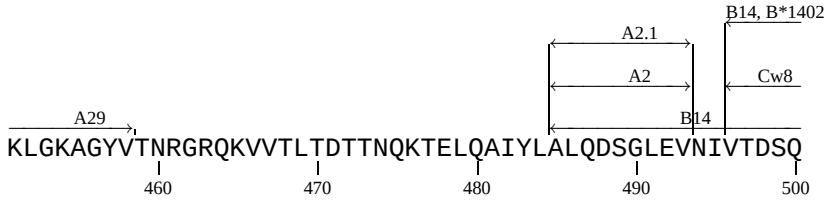

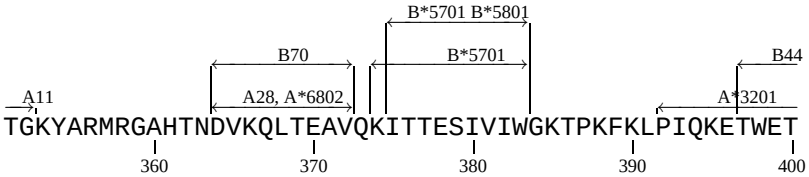

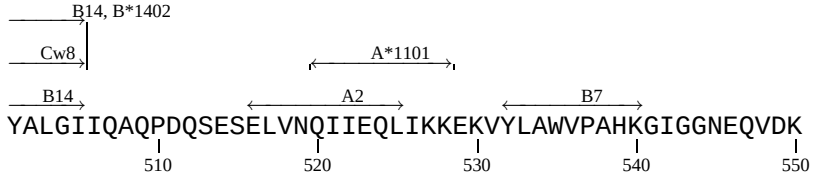

LVSAGIRKVL

-> p15 RNase end

Integrase CTL Map

B*5101

FLDGIDKAQDEHEKYHSNWRAMASDFNLPPVVAKEIVASCDKCQLKGEAM

10 20 30 40 50

A*2402 A*6802

HGQVDCSPGIWQLDCTHLEGKVILVAVHVASGYIEAEVIPAETGQETAYF

60 70 80 90 100

A*6802

LLKLAGRWPVKTIHTDNGSNFTGATVRAACWWAGIKQEFGIPYNPQSQGV

110 120 130 140 150

A*1101

B57

B*5701

VESMNKELKKIIGQVRDQAEHLKTAVQMAVFIHNFKRKGGIGGYSAGERI

160 170 180 190 200

A2

A*0201

VDIIATDIQTKELQKQITKIQNFRVYYRDSRNPLWKGPAKLLWKGEGAVV

210 220 230 240 250

IQDNSDIKVVPRRKAKIIRDYGKQMAGDDCVASRQDED

260 270 280

Rev CTL Map

B*5801

B*5701

MAGRSGDSDEELIRTVRLIKLLYQSNPPPNPEGTRQARRNRRRRWRERQR

10 20 30 40 50

Cw5

B14, Cw8

A1

B14

QIHSISERILGTYLGRSAEPVPLQLPPLERLTLDCNEDCGTSGTQGVGSP

60 70 80 90 100

QILVESPTVLESGTKE

110

gp160 CTL Map

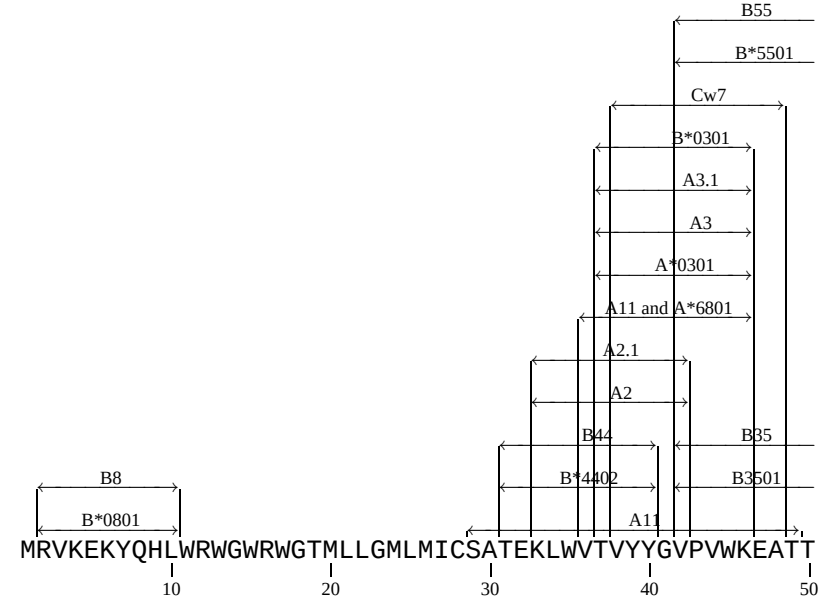

<- gp120 start

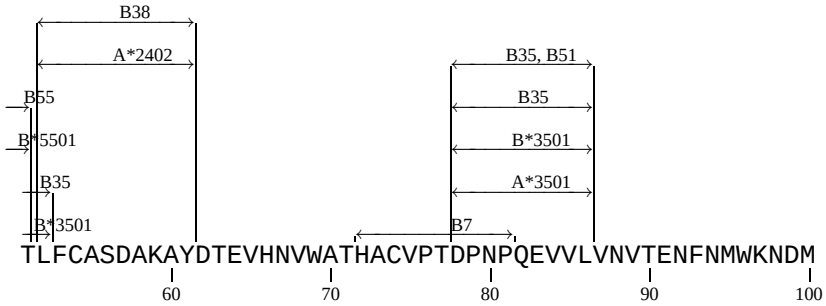

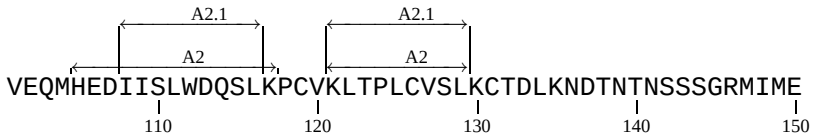

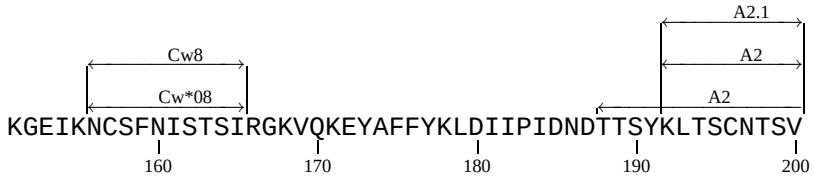

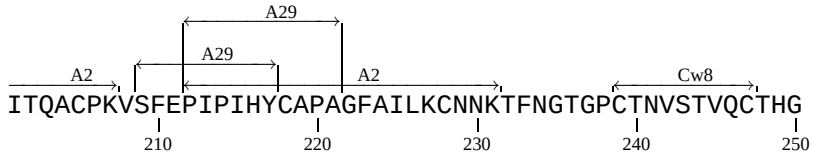

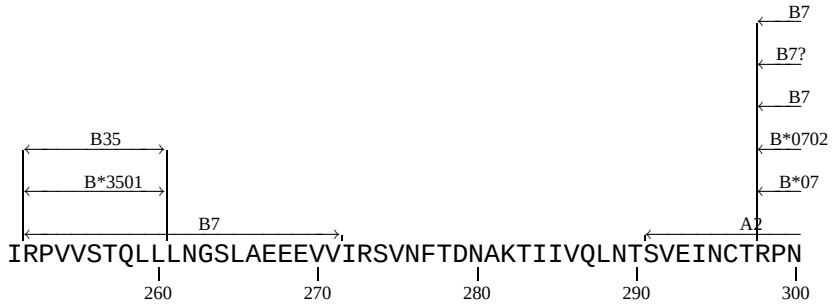

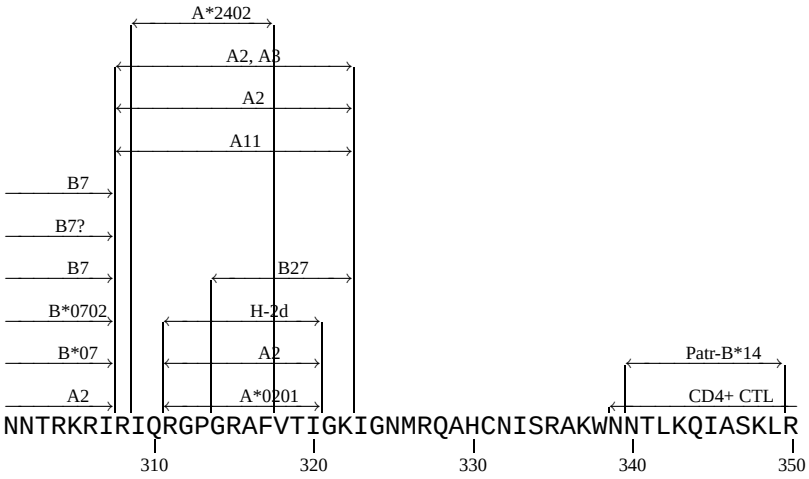

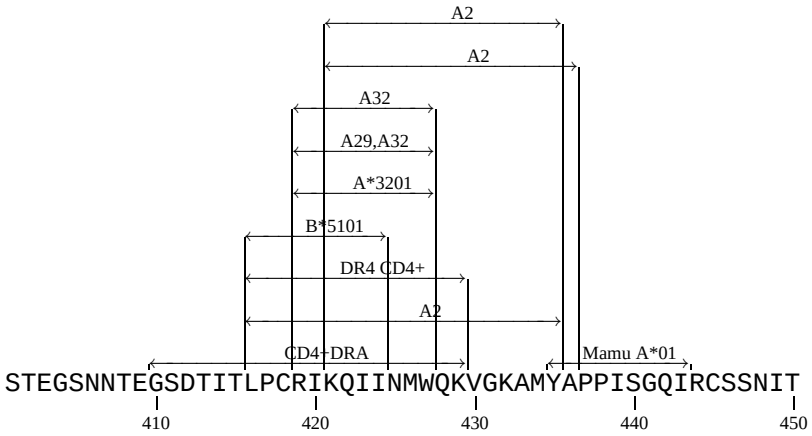

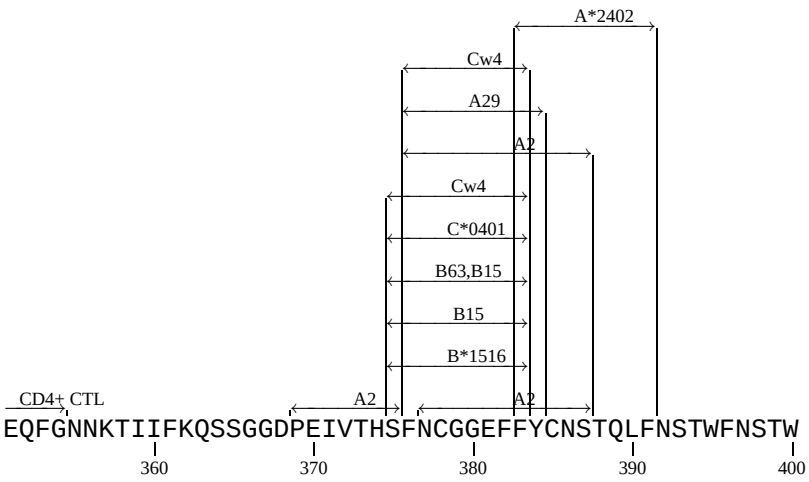

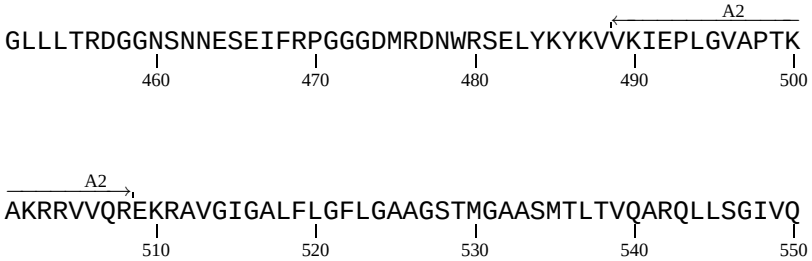

gp120 end <> gp41 start

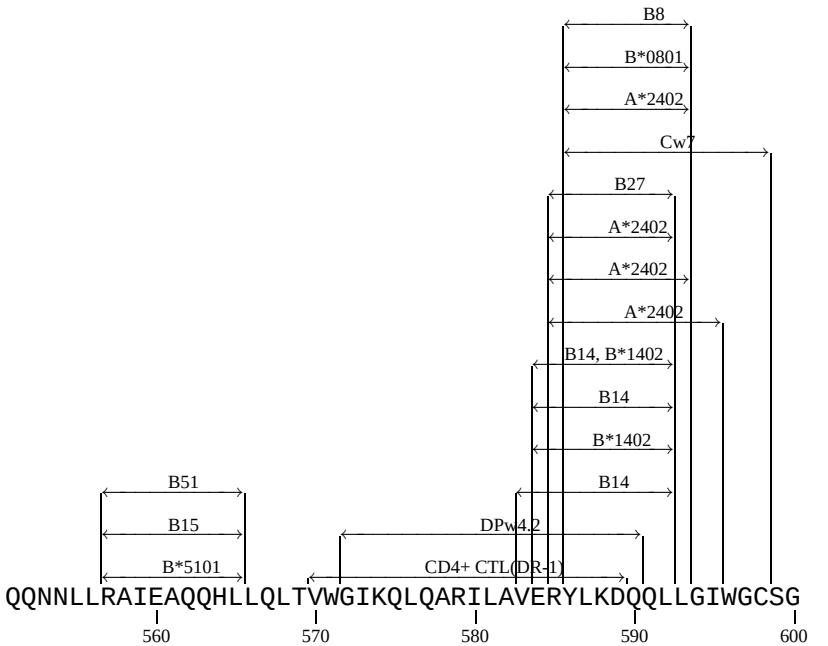
B8
B*0801
A*2402
Cw7
B27
A*2402
A*2402
A*2402
B14, B*1402
B14
B*1402
B14
B51
B15
B*5101
DPw4.2
CD4+ CTL(DR-1)
QQNNLLRAIEAQQHLLQLTVWGIKQLQARILAVERYLKDQQLLGIWGCSG
560
570
580
590
600

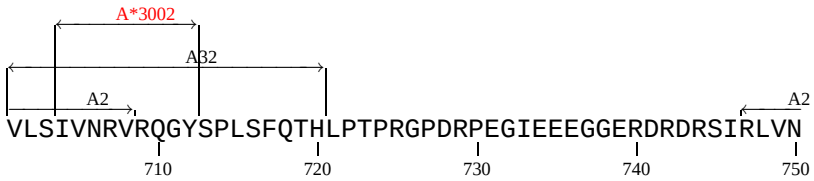
A*3002
A32
A2
A2
VLSIVNRVRQGYSPLSFQTHLPTPRGPDRPEGIEEEGGERDRDRSIRLVN
710
720
730
740
750

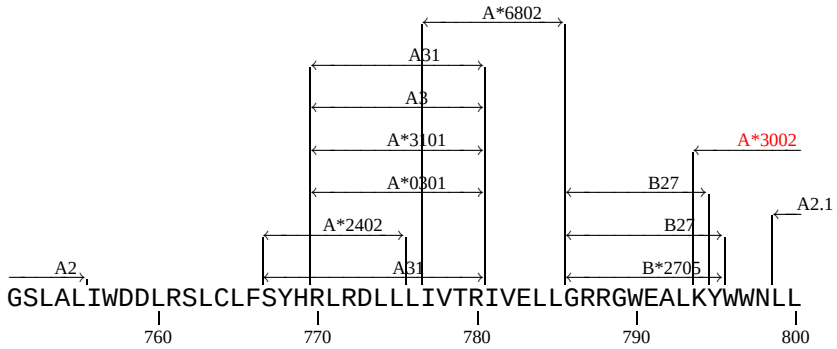
A*6802
A31
A3
A*3101
A*0301
A*2402
A31
A*3002
B27
B27
B*2705
A2.1
A2
GSLALIWDDLRSLCLFSYHRLRDLLLIVTRIVELLGRRGWEALKYWWNLL
760
770
780
790
800

B35
B*3501
KLICTTAVPWNASWSNKSLEQIWNHTTWMEWDREINNYTSLIHSLIEESQ
610
620
630
640
650

A2.1
A*2402
A2.1
A2
NQQEKNEQELLELDKWASLWNWFNITNWLWYIKLFIMIVGGLVGLRIVFA
660
670
680
690
700

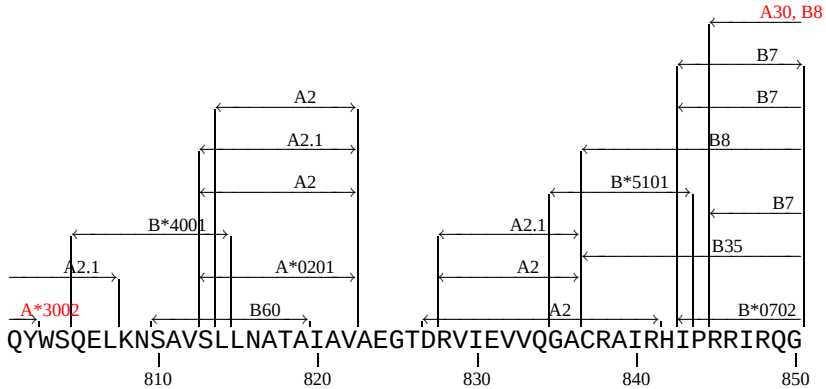
A30, B8
B7
B7
A2
A2.1
B8
A2
B*5101
B7
B*4001
A2.1
B35
A2.1
A*0201
A2
A*3002
B60
A2
B*0702
QYWSQELKNSAVSLLNATAIAVAEGTDRVIEVVQGACRAIRHIPRRIRQG
810
820
830
840
850

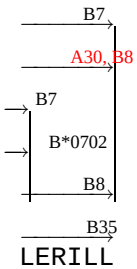

-> gp41 end

Nef CTL Map

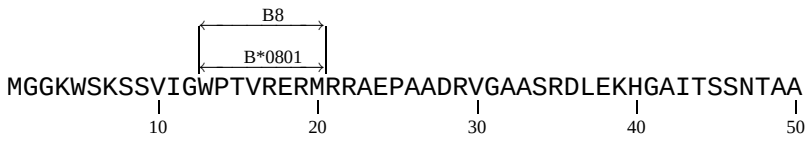

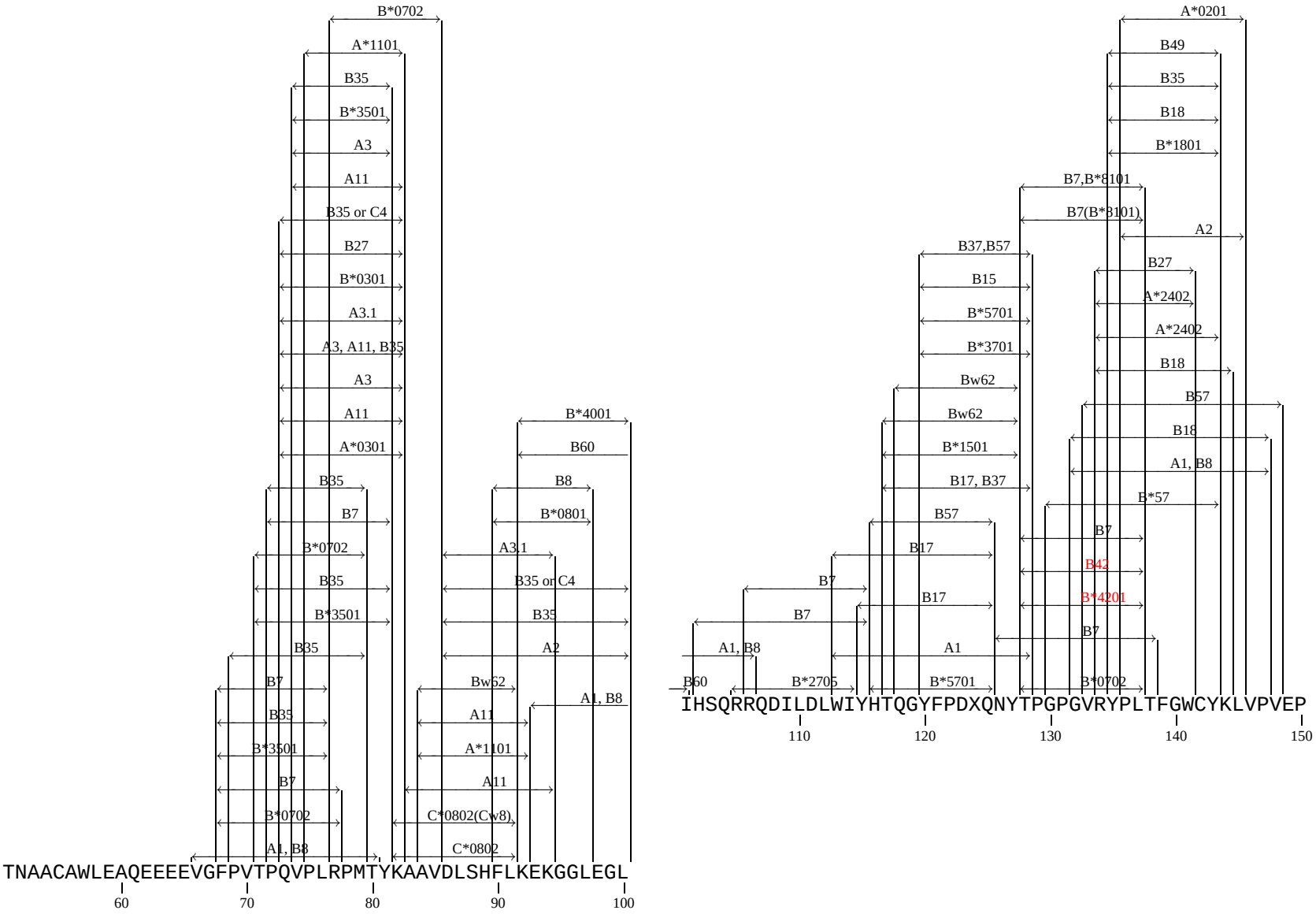
B*0702
A*1101
B35
B*3501
A3
A11
B35 or C4
B27
B*0301
A3.1
A3, A11, B35
A3
A11
A*0301
B35
B7
B*0702
B35
B*3501
B35
B7
B35
B*3501
B7
B*0702
A1, B8
B*4001
B60
B8
B*0801
A3.1
B35 or C4
B35
A2
Bw62
A1, B8
A11
A*1101
A11
C*0802(Cw8)
C*0802
TNAACAWLEAQEEEEVGFPVTPQVPLRPMTYKAAVDLSHFLKEKGGLEGL
60
70
80
90
100
A*0201
B49
B35
B18
B*1801
B7,B*8101
B7(B*3101)
A2
B37,B57
B27
B15
A*2402
B*5701
A*2402
B*3701
B18
Bw62
B57
Bw62
B18
B*1501
A1, B8
B17, B37
B*57
B57
B7
B17
B42
B7
B17
B*4201
B7
B7
A1, B8
A1
B60
B*2705
B*5701
B*0702
IHSQRRQDILDLWIYHTQGYFPDXQNYTPGPGVRYPLTFGWCYKLVPVEP
110
120
130
140
150

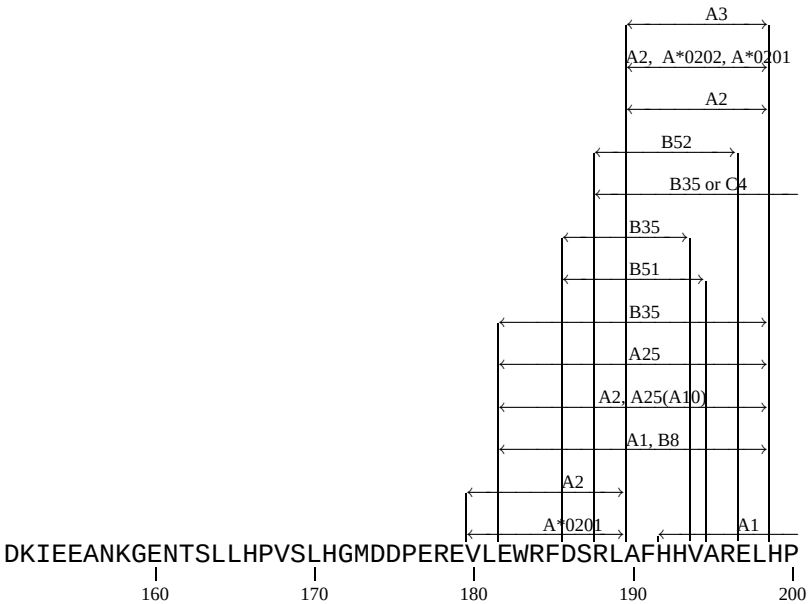

[Brander & Goulder(2001)] C. Brander & P. Goulder. The evolving £eld of HIV CTL epitope mapping: New approaches to the identi£cation of novel epitopes. *HIV Molecular Immunology Database* pages IV–1, 2001. Notes: This review article in the annual HIV Molecular Immunology Compendium presents the table of Optimal CTL Epitopes that has been curated by Brander and others for several years.

[Goulder (2001)] P. Goulder, M. Addo, M. Altfeld, & et al. Rapid de£nition of £ve novel HLA-A*3002 restricted HIV speci£c CTL epitopes by intracellular cytokine staining and Elispot assays. *J. Virol* **75(3)**:1339–1347, 2001. (Medline: 11152507).

[Tomiyama (1999)] H. Tomiyama, T. Sakaguchi, K. Miwa, S. Oka, A. Iwamoto, Y. Kaneko, & M. Takiguchi. Identi£cation of multiple HIV-1 CTL epitopes presented by HLA-B*5101. *Hum Immunol* **60**:177–86, 1999. (Medline: 99253871).