AASRDLEKHGAITSSNTAAT

QUERY	AASRDLEKHGAITSSNTAAT
CONSENSUS_A	-V-Q--d----v----i??n
A.FR.HIV232956	-V-Q--D-Y--V----I..N
A.FR.HIV232957	-V-Q--D----V-IN---T-
A.FR.HIV232959	-V-Q--D-Y----IN-----
A.KE.Q23-CXC-CG	-V-Q--D----V--K-I..N
A.SE.SE6594	-V-Q--A----V----I..N
A.SE.SE7253	-V-Q----Y--V----V..N
A.SE.SE7535	-V-Q--D-Y-------I..N
A.SE.SE8131	-V-Q----------I..N
A.SE.SE8538	-V-Q--DR--------I..N
A.SE.SE8891	-V-Q--D----V----I..N
A.UG.92UG037	-V-Q--D----V----V..N
A.UG.U455	-V-Q--D-Y--V-----SS-
CONSENSUS_B	-v----------n
B.-.E90NEF	-------R---L-----P-N
B.-.HIV232997	-V------Y----N-----N
B.-.HIV233002	-V-----AR----IN---TN
B.-.HIV233009	-V-----AR----IN-----
B.-.HIV233016	-V----------TN
B.-.HIV233020	----------T-N
B.-.HIV233023	-V----------N
B.-.HIV233029	-V----DQR----------
B.-.HIV233030	----------L-----P-N
B.-.HIV233032	----------L-----P-N
B.-.HIV233037	-V----------
B.-.HIV233038	-V----AAR----------S
B.-.HIV233043	-V----D----------
B.-.HIV233045	----------H------TN
B.-.HIV233046	-------R----------N-
B.AU.1062-1-NEF	-V---------V-----..-
B.AU.93JW-3	----------
B.AU.93LW-3	----------
B.AU.AF064660	-V----G----------
B.AU.AF064667	----------TN
B.AU.AF064676	----------
B.AU.MBC200	-------R---L-------N
B.AU.MBC925	---------E--------TN
B.CN.AF033570	-V----------..A
B.CN.AF033572	-V----------..A
B.CN.PRC8	-V----------..A
B.CN.RL42	-V----------
B.DE.D31	-V----------P--
B.DE.HAN	------K----------TN
B.DE.HEI28CS	-V-----R------N-----
B.DE.HEI3BL	-----x----------
B.DE.HEI4BL	------D------N-----N
B.DE.HIVU52491	------AR-----N----D-
B.DE.NEFCC	-V-----R----------
B.DE.NEFCG	-V---x----------
B.DE.NH53	-V----------N
B.ES.89SP061	-V----------TN
B.ES.AF082355	-V----------N
B.ES.AF082357	-V----------
B.ES.AF082358	-V-I----Y----NT-----
B.ES.AF082359	-V-Q--G----------
B.ES.AF082363	-V-----R----------N
B.ES.AF082364	-------R----------
B.ES.AF082366	-------R---L------TN
B.ES.AF082368	-V----------
B.ES.AF082370	---P-------L-T-----N
B.ES.AF082375	-V----------N------
B.ES.AF082376	-V-----R----------SN
B.ES.AF082377	-V----------..N
B.ES.AF082378	----------L-------N
B.ES.AF082380	--------Y--L------TN
B.ES.AF082383	-V----------
B.ES.AF082386	-V----DR----------
B.FR.HIV232961	------D-Y--L-N---TTN
B.FR.HIV232962	-------RY----------
B.FR.HIV232963	------D-Y----------
B.FR.HIV232964	P----------STN
B.FR.HIV232965	-V----------N
B.FR.HXB2	----------
B.FR.NE100	-V----------
B.FR.SWB884	-V----------
B.GA.OYI	----------
B.GB.001GH-93(1)	----------L------GN
B.GB.002EM-93(1)	-V----------
B.GB.003PW-93(1)	-V----------
B.GB.005PF1-93(1)	....TP-------G----TN
B.GB.006DC-93(1)	-V------Y--------..N
B.GB.010JW-93(1)	-V----------NR---TN
B.GB.011JR-93(4)	-V------Y----------N
B.GB.012WM-93(1)	-V----------
B.GB.013PP-94(2)	--------Y---------N-
B.GB.016GB-93(1)	-V-L--D----------N
B.GB.023PA-93(1)	----------N
B.GB.025JN-93(1)	-V------Q----------
B.GB.027SL-93(1)	-V----------TN
B.GB.028JH-94(1)	-V----------P-N
B.GB.030JG-93(1)	-V----------
B.GB.031DA-93(1)	-V----------
B.GB.032AN-93(1)	-V-Q--G---------I..N
B.GB.037BS-94(2)	-V----------VN
B.GB.039NM-94(1)	-V----------N
B.GB.044C1-94(2)	-V----------.---TN
B.GB.046JM-94(1)	-V----------I--S
B.GB.048AD-94(1)	-V----------
B.GB.056RP-94B(1)	--------Y--L-----P-N
B.GB.057DR-94(1)	-V-----R---------P--
B.GB.065RK-94(1)	----------TN
B.GB.067MM-94(2)	-V----------
B.GB.068JB-94(1)	----------N------
B.GB.098MS-94(1)	----------
B.GB.103CD-94(1)	----------P-N
B.GB.104RT-94(1)	-V----------
B.GB.105AS-94(1)	-V----D----V-------N
B.GB.112CR-94(2)	-V----------
B.GB.117CH-94(2)	-------R----------
B.GB.122PS-95(1)	-V----------TN
B.GB.124PD-95(1)	-V----------N
B.GB.127RG-96(1)	-V-Q--A----------
B.GB.130WDC-95(1)	----------L----A--N
B.GB.131MVS-95(1)	-V----------
B.GB.143PL-95(1)	P----------
B.GB.151DH-95(1)	-V----------N-----
B.GB.157GT-95(1)	-V----------
B.GB.160KO-95(1)	--------Y--L------S-
B.GB.161KC-95(1)	-------R---------P--
B.GB.162BB-95(1)	PV----------
B.GB.163NG-95(1)	-V----------TN
B.GB.164SZ-95(1)	-V------Y----------
B.GB.165DH-95(1)	-V----A----V--------
B.GB.166PW-95(1)	-V-Q--A----------
B.GB.167RW-95(1)	-V----------N
B.GB.168MB-95(1)	-V----------N---P--
B.GB.CAM1	-V----------
B.GB.GLNEF1	-V----K----------TN
B.GB.MANC	-V----------
B.GB.NEF2	-V----------
B.GB.NEF3	-V----------
B.GB.NEF5	-V----------
B.IN.HIVP35A	-V-----R----------
B.IT.AF011471	-V----------TN
B.IT.AF011474	-V----------N--P--
B.IT.AF011477	--------Y--L--N---TN
B.IT.AF011478	-----x--Y--L--N---TN
B.IT.AF011480	----------
B.IT.AF011482	-V----------
B.IT.AF011483	-V-----R----------TN
B.IT.AF011486	-V-----R---------P--
B.IT.AF011488	-V-------x------A..N
B.IT.AF011492	-V----------P-N
B.IT.AF047080	-V-----R----------
B.IT.AF047081	-V-----R----------
B.IT.B.IT-L1	-V-Q--Gx--------x..N
B.IT.B.IT-L2	-V----G----------
B.IT.B.IT-L3	-V------x--------P--
B.IT.B.IT-L4	-V------Y---------TN
B.IT.B.IT-L5	-V----------TN
B.IT.B.IT-R1	-V----------
B.IT.B.IT-R2	-V----G----------
B.IT.B.IT-R3	----------N
B.IT.B.IT-R4	-V----------P-N
B.IT.B.IT-R5	-V-----R-----x----TN
B.KR.AF063915	-V-----QR----T----SN
B.KR.AF063916	-V-----QR---------SN
B.KR.AF063919	-V-----QR----TG---SN
B.KR.AF063921	-V-----QR----TN---SN
B.KR.AF063926	-V---------V-------N
B.KR.AF063927	-V-----QR----T----SN
B.KR.AF063931	-V-----QR----T----SN
B.KR.HIVZ98019	-V----AQR----T----SN
B.KR.HIVZ98022	-V----DQR----T----NN
B.KR.HIVZ98024	-V-----QR--V-T----SN
B.KR.HIVZ98025	--------Y-------A--N
B.KR.HIVZ98027	-V-----Q-----T----EN
B.KR.HIVZ98029	-V-----QR----IN---GN
B.KR.HIVZ98030	-V-----QR----T----SN

```
B.KR.HIVZ98032        -V------------------
B.KR.HIVZ98034        -V-----Q------------
B.NL.3202A21          -V------------------
B.NL.NEFA             -----------L--------
B.NL.NEFD             -----------L--------
B.NL.NEFE             -V----------------TN
B.SE.AF047082         --------Y----------
B.SE.AF047083         -V-----------------N
B.SE.AF047085         -V----G-----------TN
B.TH.28-19            -V----------------E-
B.TH.AF082838         -----------L--------
B.TH.AF082839         -V-Q--G----------P-N
B.TH.AF082841         -------RY-----T-----
B.TW.LM49             -V------------------
B.US.HIV1U03375       -V----------------TN
B.US.005PF-96(1)      IT-SNTAANN---------N
B.US.AD-93(1)         -V---------------P-N
B.US.AD8              -----------L------TN
B.US.BC               -V-----------------N
B.US.BIB              -V-------E----------
B.US.BJ-93(1)         -V-------R---------N
B.US.BO1              -----------------..N
B.US.BRVA             -V------------------
B.US.BT-94(1)         -V-----R----------SN
B.US.CD1              -V----GN-----------N
B.US.D8511            -V-----------N-----N
B.US.DH1              --------Y--L-------N
B.US.DH123            ------G------------
B.US.DJ-93(1)         -V----------------TN
B.US.E1               -V---------------PTN
B.US.E81NEF           -----------------PTN
B.US.E88NEF           -------R---L-----PTN
B.US.EP-94(1)         -------RY--L------TN
B.US.FA-93(1)         -------R------------
B.US.HIV1U16893       --------Y--L-------N
B.US.HIV1U24455       -V-----------------S
B.US.HIV1U26074       --------R----------N
B.US.HIV1U26098       -V------------------
B.US.HIV1U26112       --------Y-----.----N
B.US.HIV1U26119       -----------L--------
B.US.HIV1U26141       ------A------N------
B.US.HIVU44444        -V-----------G---TN
B.US.HIVU44450        -V-----R-R-------..N
B.US.HIVU44456        -V------------------
B.US.HIVU44465        -V-----R----------H-
B.US.HIVU44468        -V------Y--------P--
B.US.HP87B1           -V-----------------N
B.US.HS-93(1)         -V-----R------------
B.US.JRCSF            -V------------------
B.US.JRFL             -V------------------
B.US.LM1              -V-------------A-HN
B.US.LT-87-1(1)       ---P-------L--F--P--
B.US.MB-94(1)         -V-----R-----------N
B.US.MNCG             -----------L--------
B.US.NC7              ---------R----------
B.US.NEF              --------------------
B.US.NEF164B          --------------------
B.US.NEF166E          -V---------V--------
B.US.NEF179C          -V-----R--------I..N
B.US.NEF226B          -V----------------..N
B.US.P102A13          -V--N--R----------S-
B.US.P233A17          ----N------L-----V-N
B.US.P248A01          --------------------
B.US.P357A01          -------R---L-T---PG-
B.US.P896             -V----AR---------..N
B.US.PC-93(1)         -V----------------..N
B.US.PRISO(1)         -V------------T-----
B.US.RF               ----------T--------N
B.US.RP12             -V----------------TN
B.US.RR1              --------------------
B.US.SC               -----------------P-N
B.US.SF2              -V------------------
B.US.U16917           -V-----Q----------N
B.US.WEAU160          -V----A---------E..N
B.US.WR27             -V-----------N------
B.US.YU2              -V-----R------------

CONSENSUS_C           ---q--d-?--l-----p-n
C.BR.92BR025          P--Q-SD-Y--L---S-P-N
C.BW.96BW01B21        ---Q--D-Y--L-T---DPN
C.BW.96BW0402         T--Q--D----L-T-----N
C.BW.96BW0502         ---Q--D-Y--L-----STN
C.BW.96BW1104         ---Q--D----L-------N
C.BW.96BW1210         S--K-------L-T-----N
C.BW.96BW15B03        ---Q--D-Y--F------SN
C.BW.96BW16B01        -GYQ--D-DR-L-----DIN
C.BW.96BW17A09        ---Q--D----L-----P-N
C.ET.ETH2220          ------D-Y--L-----P-N
C.FR.HIV232966        ---Q--D----L-----P-N
C.FR.HIV232967        ---K--DR---L-----P--
C.FR.HIV232968        ---Q--D----L-----P--
C.FR.HIV232969        -V----DR------N--PT-
C.FR.HIV232970        ---Q--D-Y--L--N--P-N
C.FR.HIV232971        ---Q--D-Y--L-----PGS
C.FR.HIV232972        ---Q--D-Y--L-T---PTN
C.FR.HIV232973        ---Q--D-Y--L--N---T-
C.FR.HIV232976        ---Q--D----L-----PGN
C.FR.HIV232977        ---Q--D----L--------
C.FR.HIV232978        ---Q--D----L-----P-N
C.FR.HIV232979        ------DRR-PL-IN--P-S
C.FR.HIV232980        ---Q--D----L-----P-N
C.FR.HIV232996        ---Q--D-Y--L-T---P-N
C.IN.21068            ---Q--DRY--L-----DT-
C.IN.301904           ---Q--D-Y--L-----DI-
C.IN.301999           ---Q--D-Y--L-----DT-
C.IN.94IN11246        ---Q--D-Y--L-----DT-
C.IN.HIVY15117        ---Q--D----L-----DT-
C.IN.HIVY17884        ---Q--DR---L-----DT-
C.IN.HIVY17891        ---Q--D----L-----DT-
C.IN.HIVY17892        ---Q--D-Y--L-----DT-

CONSENSUS_D           -v----------------s-
D.CD.84ZR085          -V-----R----------T-
D.CD.ELI              -V----------------S-
D.CD.NDK              -V----------------S-
D.UG.94UG1141         ------------------Q-

CONSENSUS_F           -V-Q--D-r--------?--
F.CM.HIV232985        KV-Q--D----------R--
F.CM.HIV232986        -V-Q--D-R----N---G--
F.FR.HIV232987        -V-Q--DRR--V--------

CONSENSUS_F1          -V-q--?RR--------r--
F1.BE.VI850           -V----DRR--------RT-
F1.BR.93BR020.1       -V-Q---RR--------R-N
F1.FI.FIN9363         -V-Q---RR--------G--
F1.FR.MP411           -V-Q--DRR--V--------

CONSENSUS_F2          ?V-Q--D-?----?---?--
F2.CM.MP255           KV-Q--D----------R--
F2.CM.MP257           -V-Q--D-R----N---G--

CONSENSUS_G           -v-Q--?r----------tn
G.BE.DRCBL            -V-Q--DR------R---G-
G.FI.HH8793           -V-Q--AR----------TN
G.ML.HIV232990        ---Q--D----------P-N
G.NG.92NG083          -V-Q--AR----------TN
G.NG.HIV232991        -F-Q--GR----------G-
G.NG.HIV232992        ---Q--AR----------T-
G.SE.SE6165           -V-Q--DR-----------N

CONSENSUS_H           -V----dRR--V-iN---s-
H.BE.VI991            -V-Q--DRR--V-IN-I-SN
H.BE.VI997            -V----DRR--V-IN-----
H.CD.HIV232994        -V-Q--SRR--V-IN-M-SN
H.CD.HIV232995        -V----DRR--V-VN-----
H.CF.90CF056          -V----DRR--V-IN---S-

CONSENSUS_J           -V-Q--A-------------
J.SE.SE9173           -V-Q--A-------------
J.SE.SE9280           -V-Q--A-------------

CONSENSUS_K           -V-Q--??---V-----??N
K.CD.EQTB11C          -V-Q--D----V------FN
K.CM.MP535            -V-Q--AR---V-----SHN
N.CM.YBF30            ---Q--ANR----IR--RDN

CONSENSUS_O           ??--E-A?R-G-?--H-PQN
O.CM.ANT70C           QI--E-AAR-G-P--H-PQN
O.CM.MVP5180          -V--E-ATR-G-S--H-PQN
CRF01_AE.CF.90CF402   -V-Q--D----V----I..N
CRF01_AE.FR.232982    -V-Q--D----V----M..N
CRF01_AE.FR.232983    -V-Q--D---------M..N
CRF01_AE.FR.232984    -V-Q--D----V----M..N
CRF01_AE.TH.1-2       -V-Q--D---VV----M..N
CRF01_AE.TH.1-3       -V-Q--D----V----M..N
CRF01_AE.TH.11-25     -I-Q--D-Y--V----M..N
CRF01_AE.TH.11-31     -I-Q--D-Y--V----M..D
CRF01_AE.TH.122-21    -V-Q--DR---V----M..N
CRF01_AE.TH.18-47     -V-Q--D----V----M..N
CRF01_AE.TH.235-3     -V-Q--D----V----I..N
CRF01_AE.TH.235-32    -V-Q--D----V----I..N
CRF01_AE.TH.24-54     ---Q--D----V---SM..N
CRF01_AE.TH.240-12    -V-Q--D---------I..D
```

```
CRF01_AE.TH.26-3      -V-Q--D----V----I..N
CRF01_AE.TH.35-6      -V-Q--D----V----M..N
CRF01_AE.TH.6-9       -V-Q--D----V----M..N
CRF01_AE.TH.73-44     -V-Q--D----V----M..N
CRF01_AE.TH.74-26     -V-Q--D-Y--V----I..N
CRF01_AE.TH.89-30     -V-Q--D----V----M..N
CRF01_AE.TH.9-3       -V-Q--D----V----M..N
CRF01_AE.TH.93TH253   -V-Q--D----V----M..N
CRF01_AE.TH.98-4      -V-Q--D---------M..N
CRF01_AE.TH.CM240     -V-Q--D---------I..D
CRF01_AE.TH.TH022     -V-Q--D----V--T-M..D
CRF01_AE.TH.TH047     -V----D----V----M..N
CRF02_AG.FR.DJ263     ---Q--DR----------D-
CRF02_AG.FR.DJ264     ---Q--DR----------E-
CRF02_AG.NG.IBNG      ---Q--DR----------Q-
CRF03_AB.RU.KAL1532   PV-Q--D-Y--V-------N
CRF04_cpx.CY.94CY03   -V-Q--D------IN-----
CRF04_cpx.GR.97PVCH   -V----D-------------
CRF04_cpx.GR.97PVMY   -V-Q--D-Y----T------
AC.IN.21301           -V-Q--D----V----V..N
AC.RW.92RW009         ---Q--D-Y--L-----PSN
AC.SE.SE9488          -V-Q--D---------I..N
AC.ZM.ZAM184          -V-Q--AAR--V------H-
ACD.SE.SE8603         ---Q--D-Y--L-----VTN
AD.SE.SE6954          ------G-----------Q-
AD.SE.SE7108          -V-Q--D---------I..N
ADHU.NO.NOGIL3        ------DRR---xIN-LPSN
ADU.CD.MAL            -V-Q--D-C--AA--SP--N
AF.GA.HIV232981       -V-Q-------------RT-
AG.NG.G3              --PQ--AR----------Q-
AG.SE.SE7812          ---Q--DR------------
AGHU.GA.VI354         -V-Q--D-R----TN--VK-
AGJ.AU.BFP90          -V-Q--D-----------T-
AGJ.ML.95ML84         -V-Q--DT---------VT-
AGU.CD.Z321           ---Q--A-----S-----TN
BF.BR.93BR029.4       -V-Q---RR--------G-N
DF.BE.VI961           SV-Q---RR-----N-----
GH.GA.HIV232993       ------DRR----IN-I-SN
GU.FR.HIV232974       -V-Q--DR------------
U.CD.VI1126           -V-Q--A----------SS-
U.CM.HIV232988        -V-Q--AR---V-----SHN
U.FR.HIV232958        T--K----F--V-----PQ-
U.FR.HIV232960        ---K---NF--V-----PQ-

CONSENSUS_CPZ         ?V-?--??-----?R--P??
CPZ.GA.CPZGAB         EV-K---R------R--PE-
CPZ.US.CPZUS          PV-Q--AE-----TR--PQN
```

EKASFPEVIPMFSALSEGAT

```
QUERY                EKASFPEVIPMFSALSEGAT

CONSENSUS_A          ---fs---------------
A.KE.Q23-CXC-CG      ---FS---------------
A.SE.SE6594          --GFN---------------
A.SE.SE7253          ---FS-----V---------
A.SE.SE7535          ---FS---------------
A.SE.SE8131          -R-FS---------------
A.SE.SE8538          --GFN---------------
A.SE.SE8891          --GFS---------------
A.UG.92UG037         ---LS---------------
A.UG.U455            D--FS---------------

CONSENSUS_B          ---FS---------------
B.AU.AF128998        ---FS---------------
B.-.NL43E9           ---FS---------------
B.AU.MBC18           ---FS---------------
B.AU.MBC200          ---FS---------------
B.AU.MBC925          ---FS---------------
B.AU.MBCC54          ---FS---------------
B.AU.MBCC98          ---FS---------------
B.AU.MBCD36          ---FS-------T-------
B.CN.RL42            ---FS---------------
B.DE.D31             ---FS---------------
B.DE.HAN             ---FS---------------
B.ES.89SP061         ---FS---------------
B.FR.HXB2            ---FS---------------
B.GA.OYI             ---FS----------A----
B.GB.CAM1            ---FS---------------
B.GB.MANC            ---FS--------------I
B.JP.JH31            ---FS---------------
B.NL.3202A21         ---FS---------------
B.TW.LM49            ---FS---------------
B.US.85WCIPR54       ---FS---------------
B.US.AD8             ---FS---------------
B.US.BC              ---FS---------------
B.US.DH123           ---FS---------------
B.US.JRCSF           ---FS---------------
B.US.JRFL            ---FS---------------
B.US.MNCG            ---FS---------------
B.US.NC7             ---FS---------------
B.US.NY5CG           ---FS---------------
B.US.P896            ---FS---------------
B.US.RF              ---FS---------------
B.US.SF2             ---FS---------------
B.US.WC001           ---FS---------------
B.US.WEAU160         ---FS---------------
B.US.WR27            ---FS---------------
B.US.YU2             ---FS---------------

CONSENSUS_C          ---FS-------T-------
C.BR.92BR025         ---FS-------T-------
C.BW.96BW01B22       ---FS-------T-------
C.BW.96BW0402        ---FS-------T-------
C.BW.96BW0502        ---FS-------T-------
C.BW.96BW1104        ---FS-------T-------
C.BW.96BW1210        ---FS--I----T-------
C.BW.96BW15B03       ---FS-------T-------
C.BW.96BW1626        ---FS-------T-------
C.BW.96BW17A09       ---FS-------T-------
C.ET.ETH2220         ---FS-------T-------
C.IN.93IN904         ---FS-------T-------
C.IN.93IN905         ---FS-------T-------
C.IN.93IN999         ---FS-------T-------
C.IN.94IN11246       ---FS-------T-------
C.IN.95IN21068       ---FS-------T-------

CONSENSUS_D          ---Fs---------------
D.CD.84ZR085         ---FN---------------
D.CD.ELI             ---FS---------------
D.CD.NDK             ---FS---------------
D.CD.Z2Z6            ---FS---------------
D.UG.94UG1141        ---FN---------------

CONSENSUS_F          ---FS---------------
F.BR.BZ162           ---FS---------------
F.CD.VI174           ---FS---------------
F.RW.VI69            ---FS---------------

CONSENSUS_F1         ---FS---------------
F1.BE.VI850          ---FS---------------
F1.BR.93BR020.1      ---FS---------------
F1.FI.FIN9363        ---FS---------------
F1.FR.MP411          ---FS---------------

CONSENSUS_F2         ---FS---------------
F2.CM.MP255          ---FS---------------
F2.CM.MP257          ---FS---------------

CONSENSUS_G          ---FS---------------
G.BE.DRCBL           ---FS-------T-------
G.FI.HH8793          ---FS---------------
G.NG.92NG083         ---FS---------------
G.SE.SE6165          ---FS---------------

CONSENSUS_H          ---FS---------------
H.BE.VI991           ---FS---------------
H.BE.VI997           ---FS---------------
H.CF.90CF056         ---FS---------------

CONSENSUS_J          ---FS---------------
J.SE.SE9173          ---FS---------------
J.SE.SE9280          ---FS---------------

CONSENSUS_K          ---FS---------------
K.BE.VI325           ---FS----------AD---
K.CD.EQTB11C         ---FS---------------
K.CM.MP535           ---FS-------T-------
N.CM.YBF30           ---FS-------M-------

CONSENSUS_O          ---FN--I----M------?
O.CM.ANT70C          ---FN--I----M------I
O.CM.MVP5180         ---FN--I----M------V
CRF01-AE.CF.90CF40   --GFN---------------
CRF01-AE.TH.93TH25   --GFN---------------
CRF01-AE.TH.CM240    --GFN---------------
CRF01-AE.TH.TH022    --GFN---------------
CRF01-AE.TH.TH047    --GFS---------------
CRF02_AG.FR.DJ263    ---FS-------T-------
CRF02_AG.FR.DJ264    ---FS-------T-------
CRF02_AG.NG.IBNG     --GFS---------------
CRF03_AB.RU.KAL15    ---FS---------------
CRF04_cpx.CY.94CY0   ---FS---------------
CRF04_cpx.GR.97PVC   ---FS---------------
CRF04_cpx.GR.97PVM   --GFS---------------
AC.ET.E3099G         ---FS---------------
AC.IN.21301          ---FS--I----T-------
AC.RW.92RW009        ---FSQ------T-------
AC.SE.SE9488         D--FS-------T-------
AC.ZM.ZAM174-21      ---FS-------T-------
AC.ZM.ZAM184         ---FS---------------
AC.ZM.ZAM716-17      ---FS-------T-------
ACD.SE.SE8603        ---FS---------------
AD.SE.SE6954         ---FS--------------A
AD.SE.SE7108         ---FS---------------
ADHU.NO.NOGIL3       ---FS-----------D---
ADU.CD.MAL           ---FS---------------
AG.NG.G3             --NFS-------T-------
AG.SE.SE7812         ---FS---------------
AGHU.GA.VI354        --GFS---------------
AGJ.AU.BFP90         D--FS-------T-------
AGJ.ML.95ML8         ---FS---------------
AGU.CD.Z321          --NFS---------------
BF.BR.93BR029.4      ---FS---------------
DF.CD.VI961          ---FS-------T-------
U.CD.VI1126          ---FS-------T-------

CONSENSUS_CPZ        ---Fn---------------
CPZ.CD.CPZANT        --NFN---------------
CPZ.GA.CPZGAB        ---FS--------------L
CPZ.US.CPZUS         ---FN-------M-------
```

MFSALSEGATPQDLNTMLNT

```
QUERY                MFSALSEGATPQDLNTMLNT

CONSENSUS_A          ---------------m---i
A.KE.Q23-CXC-CG      ---------------M---I
A.SE.SE6594          ---------------M---I
A.SE.SE7253          V--------------M---I
A.SE.SE7535          ---------------M---I
A.SE.SE8131          -----------H---M---I
A.SE.SE8538          -------------------I
A.SE.SE8891          -----------G---M---I
A.UG.92UG037         ---------------M---I
A.UG.U455            ---------------M---V

CONSENSUS_B          --------------------
B.AU.AF128998        --------------------
B.-.NL43E9           --------------------
B.AU.MBC18           --------------------
B.AU.MBC200          --------------------
B.AU.MBC925          --------------------
B.AU.MBCC54          --------------------
B.AU.MBCC98          --------------------
B.AU.MBCD36          --T-----------------
B.CN.RL42            --------------------
B.DE.D31             --------------------
B.DE.HAN             --------------------
B.ES.89SP061         --------------------
B.FR.HXB2            --------------------
B.GA.OYI             -----A--------------
B.GB.CAM1            --------------------
B.GB.MANC            ---------I----------
B.JP.JH31            --------------------
B.NL.3202A21         --------------------
B.TW.LM49            --------------------
B.US.85WCIPR54       --------------------
B.US.AD8             --------------------
B.US.BC              --------------------
B.US.DH123           --------------------
B.US.JRCSF           --------------------
B.US.JRFL            --------------------
B.US.MNCG            --------------------
B.US.NC7             --------------------
B.US.NY5CG           --------------------
B.US.P896            --------------------
B.US.RF              --------------------
B.US.SF2             --------------------
B.US.WC001           --------------------
B.US.WEAU160         --------------------
B.US.WR27            --------------Y-----
B.US.YU2             --------------------

CONSENSUS_C          --T-----------------
C.BR.92BR025         --T-----------------
C.BW.96BW01B22       --T-----------------
C.BW.96BW0402        --T-----------------
C.BW.96BW0502        --T-----------------
C.BW.96BW1104        --T---------------T-
C.BW.96BW1210        --T-----------------
C.BW.96BW15B03       --T-----------------
C.BW.96BW1626        --T-----------------
C.BW.96BW17A09       --T-----------------
C.ET.ETH2220         --T-----------------
C.IN.93IN904         --T-----------------
C.IN.93IN905         --T-----------------
C.IN.93IN999         --T-----------------
C.IN.94IN11246       --T-----------------
C.IN.95IN21068       --T-----------------
CONSENSUS_D          --------------------
D.CD.84ZR085         --------------------
D.CD.ELI             --------------------
D.CD.NDK             --------------------
D.CD.Z2Z6            --------------------
D.UG.94UG1141        --------------------
CONSENSUS_F          --------------------
F.BR.BZ162           --------------------
F.CD.VI174           --------------------
F.RW.VI69            --------------------

CONSENSUS_F1         --------------------
F1.BE.VI850          -----------T--------
F1.BR.93BR020.1      --------------------
F1.FI.FIN9363        --------------------
F1.FR.MP411          --------------------
CONSENSUS_F2         --------------------
F2.CM.MP255          --------------------
F2.CM.MP257          --------------------

CONSENSUS_G          -----------------xx-
G.BE.DRCBL           --T-----------------
G.FI.HH8793          --------------------
G.NG.92NG083         --------------------
G.SE.SE6165          ---------------L----

CONSENSUS_H          ---------------A----
H.BE.VI991           ---------------A----
H.BE.VI997           ---------------A----
H.CF.90CF056         ---------------A----
CONSENSUS_J          --------------------
J.SE.SE9173          --------------------
J.SE.SE9280          --------------------

CONSENSUS_K          --------------------
K.BE.VI325           -----AD-------------
K.CD.EQTB11C         --------------------
K.CM.MP535           --T-----------------
N.CM.YBF30           --M--------S--------

CONSENSUS_O          --M------??Y-I-----A
O.CM.ANT70C          --M------ISY-I-----A
O.CM.MVP5180         --M------V-Y-I-----A
CRF01-AE.CF.90CF40   ---------------M---I
CRF01-AE.TH.93TH25   ---------------M---I
CRF01-AE.TH.CM240    ---------------M---I
CRF01-AE.TH.TH022    ---------------M---I
CRF01-AE.TH.TH047    ---------------M---I
CRF02_AG.FR.DJ263    --T------------M---I
CRF02_AG.FR.DJ264    --T------------M---I
CRF02_AG.NG.IBNG     ---------------M---I
CRF03_AB.RU.KAL15    ---------------M---I
CRF04_cpx.CY.94CY0   ---------------M---I
CRF04_cpx.GR.97PVC   ---------------M---I
CRF04_cpx.GR.97PVM   ---------------M---I
AC.ET.E3099G         --------------------
AC.IN.21301          --T-----------------
AC.RW.92RW009        --T-----------------
AC.SE.SE9488         --T-----------------
AC.ZM.ZAM174-21      --T-----------------
AC.ZM.ZAM184         --------------------
AC.ZM.ZAM716-17      --T-----------------
ACD.SE.SE8603        ---------------M---I
AD.SE.SE6954         ---------A--------S-
AD.SE.SE7108         ---------------M---I
ADHU.NO.NOGIL3       ------D--------M---I
ADU.CD.MAL           ---------------M---I
AG.NG.G3             --T-----------------
AG.SE.SE7812         ---------------M---I
AGHU.GA.VI354        ---------------M---I
AGJ.AU.BFP90         --T------------M---I
AGJ.ML.95ML8         ---------------M---I
AGU.CD.Z321          --------------------
BF.BR.93BR029.4      --------------------
DF.CD.VI961          --T-----------------
U.CD.VI1126          --T-----------------

CONSENSUS_CPZ        -------------v-----A
CPZ.CD.CPZANT        -----------H-------A
CPZ.GA.CPZGAB        ---------L---V-----A
CPZ.US.CPZUS         --M----------V-----A
```

PQDLNTMLNTVGGHQAAMQM

```
QUERY                PQDLNTMLNTVGGHQAAMQM

CONSENSUS_A          -----m---i----------
A.KE.Q23-CXC-CG      -----M---I----------
A.SE.SE6594          -----M---I----------
A.SE.SE7253          -----M---I----------
A.SE.SE7535          -----M---I----------
A.SE.SE8131          -H---M---I--------E-
A.SE.SE8538          ---------I----------
A.SE.SE8891          -G---M---I----------
A.UG.92UG037         -----M---I----------
A.UG.U455            -----M---V----------

CONSENSUS_B          --------------------
B.AU.AF128998        --------------------
B.-.NL43E9           ------------------H-
B.AU.MBC18           --------------------
B.AU.MBC200          --------------------
B.AU.MBC925          --------------------
B.AU.MBCC54          --------------------
B.AU.MBCC98          --------------------
B.AU.MBCD36          --------------------
B.CN.RL42            --------------------
B.DE.D31             --------------------
B.DE.HAN             --------------------
B.ES.89SP061         --------------------
B.FR.HXB2            --------------------
B.GA.OYI             --------------------
B.GB.CAM1            --------------------
B.GB.MANC            --------------------
B.JP.JH31            --------------------
B.NL.3202A21         --------------------
B.TW.LM49            --------------------
B.US.85WCIPR54       --------------------
B.US.AD8             --------------------
B.US.BC              --------------------
B.US.DH123           --------------------
B.US.JRCSF           --------------------
B.US.JRFL            --------------------
B.US.MNCG            --------------------
B.US.NC7             --------------------
B.US.NY5CG           --------------------
B.US.P896            --------------------
B.US.RF              --------------------
B.US.SF2             --------------------
B.US.WC001           --------------------
B.US.WEAU160         --------------------
B.US.WR27            ----Y---------------
B.US.YU2             --------------------

CONSENSUS_C          --------------------
C.BR.92BR025         --------------------
C.BW.96BW01B22       --------------------
C.BW.96BW0402        --------------------
C.BW.96BW0502        --------------------
C.BW.96BW1104        --------T-----------
C.BW.96BW1210        --------------------
C.BW.96BW15B03       --------------------
C.BW.96BW1626        --------------------
C.BW.96BW17A09       --------------------
C.ET.ETH2220         --------------------
C.IN.93IN904         --------------------
C.IN.93IN905         --------------------
C.IN.93IN999         --------------------
C.IN.94IN11246       --------------------
C.IN.95IN21068       --------------------
CONSENSUS_D          --------------------
D.CD.84ZR085         --------------------
D.CD.ELI             --------------------
D.CD.NDK             --------------------
D.CD.Z2Z6            --------------------
D.UG.94UG1141        --------------------
CONSENSUS_F          --------------------
F.BR.BZ162           --------------------
F.CD.VI174           --------------------
F.RW.VI69            --------------------

CONSENSUS_F1         --------------------
F1.BE.VI850          -T------------------
F1.BR.93BR020.1      --------------------
F1.FI.FIN9363        --------------------
F1.FR.MP411          --------------------
CONSENSUS_F2         --------------------
F2.CM.MP255          --------------------
F2.CM.MP257          --------------------

CONSENSUS_G          -------xx-----------
G.BE.DRCBL           --------------------
G.FI.HH8793          --------------------
G.NG.92NG083         --------------------
G.SE.SE6165          -----L--------------

CONSENSUS_H          -----A--------------
H.BE.VI991           -----A--------------
H.BE.VI997           -----A--------------
H.CF.90CF056         -----A--------------

CONSENSUS_J          ----------I---------
J.SE.SE9173          ----------I---------
J.SE.SE9280          ----------I---------

CONSENSUS_K          --------------------
K.BE.VI325           --------------------
K.CD.EQTB11C         --------------------
K.CM.MP535           --------------------
N.CM.YBF30           -S------------------

CONSENSUS_O          ?Y-I-----AI----G-L-V
O.CM.ANT70C          SY-I-----AI----G-L-V
O.CM.MVP5180         -Y-I-----AI----G-L-V
CRF01-AE.CF.90CF40   -----M---I---------I
CRF01-AE.TH.93TH25   -----M---I----------
CRF01-AE.TH.CM240    -----M---I----------
CRF01-AE.TH.TH022    -----M---I----------
CRF01-AE.TH.TH047    -----M---I----------
CRF02_AG.FR.DJ263    -----M---I----------
CRF02_AG.FR.DJ264    -----M---I----------
CRF02_AG.NG.IBNG     -----M---I----------
CRF03_AB.RU.KAL15    -----M---I----------
CRF04_cpx.CY.94CY0   -----M---I----------
CRF04_cpx.GR.97PVC   -----M---I----------
CRF04_cpx.GR.97PVM   -----M---I----------
AC.ET.E3099G         --------------------
AC.IN.21301          --------------------
AC.RW.92RW009        --------------------
AC.SE.SE9488         --------------------
AC.ZM.ZAM174-21      --------------------
AC.ZM.ZAM184         --------------------
AC.ZM.ZAM716-17      --------------------
ACD.SE.SE8603        -----M---I----------
AD.SE.SE6954         --------S----------I
AD.SE.SE7108         -----M---I----------
ADHU.NO.NOGIL3       -----M---I----------
ADU.CD.MAL           -----M---I----------
AG.NG.G3             --------------------
AG.SE.SE7812         -----M---I----------
AGHU.GA.VI354        -----M---I----------
AGJ.AU.BFP90         -----M---I----------
AGJ.ML.95ML8         -----M---I----------
AGU.CD.Z321          --------------------
BF.BR.93BR029.4      --------------------
DF.CD.VI961          --------------------
U.CD.VI1126          --------------------

CONSENSUS_CPZ        ---v-----A-----G---V
CPZ.CD.CPZANT        -H-------A--D--G---V
CPZ.GA.CPZGAB        ---V-----A-----G---V
CPZ.US.CPZUS         ---V-----AI----G---V
```

QMVHQAISPRTLNAWVKVVE

```
QUERY                QMVHQAISPRTLNAWVKVVE

CONSENSUS_A          -----sl-----------i-
A.KE.Q23-CXC-CG      --I--SL-----------I-
A.SE.SE6594          --I--SL-----------I-
A.SE.SE7253          -----SL-----------I-
A.SE.SE7535          -----SL-----------I-
A.SE.SE8131          -----VM-----------I-
A.SE.SE8538          --I--NL-----------I-
A.SE.SE8891          -----SL-----------I-
A.UG.92UG037         --I--SL-----------I-
A.UG.U455            -P----L-------------

CONSENSUS_B          --------------------
B.AU.AF128998        ------------------I-
B.-.NL43E9           --------------------
B.AU.MBC18           ------------------I-
B.AU.MBC200          --------------------
B.AU.MBC925          --------------------
B.AU.MBCC54          ------L-------------
B.AU.MBCC98          --------------------
B.AU.MBCD36          --------A-----------
B.CN.RL42            -----P--------------
B.DE.D31             -----P--------------
B.DE.HAN             --------------------
B.ES.89SP061         --------------------
B.FR.HXB2            --------------------
B.GA.OYI             -----P--------------
B.GB.CAM1            --------------------
B.GB.MANC            -----S--------------
B.JP.JH31            --------------------
B.NL.3202A21         ------L-------------
B.TW.LM49            --------------------
B.US.85WCIPR54       --------------------
B.US.AD8             --------------------
B.US.BC              --------------------
B.US.DH123           ------L-------------
B.US.JRCSF           ------------------I-
B.US.JRFL            --------------------
B.US.MNCG            --------------------
B.US.NC7             ------------------I-
B.US.NY5CG           --------------------
B.US.P896            --------------------
B.US.RF              --------------------
B.US.SF2             --------------------
B.US.WC001           --------------------
B.US.WEAU160         ------L-----------I-
B.US.WR27            ------L-----F-------
B.US.YU2             --------------------

CONSENSUS_C          ------------------i-
C.BR.92BR025         -----P--A-----------
C.BW.96BW01B22       -----PL-----------I-
C.BW.96BW0402        ------------------I-
C.BW.96BW0502        ------------------I-
C.BW.96BW1104        ------------------I-
C.BW.96BW1210        ------------------I-
C.BW.96BW15B03       ------------------I-
C.BW.96BW1626        -----------S------I-
C.BW.96BW17A09       --------------------
C.ET.ETH2220         -----P--A-----------
C.IN.93IN904         ------L-----------I-
C.IN.93IN905         ------------------I-
C.IN.93IN999         -----P------------I-
C.IN.94IN11246       ------------------I-
C.IN.95IN21068       ------------------I-

CONSENSUS_D          ------------------I-
D.CD.84ZR085         ------L-----------I-
D.CD.ELI             ------------------I-
D.CD.NDK             ------------------I-
D.CD.Z2Z6            ------------------I-
D.UG.94UG1141        ----HPL-----------I-

CONSENSUS_F          ------------------I-
F.BR.BZ162           -----S------------I-
F.CD.VI174           ------------------I-
F.RW.VI69            ------------------I-

CONSENSUS_F1         -----s?-----------I-
F1.BE.VI850          -----SL-----------I-
F1.BR.93BR020.1      -----SL-----------I-
F1.FI.FIN9363        ------------------I-
F1.FR.MP411          -----P------------I-

CONSENSUS_F2         -----?L-----------I-
F2.CM.MP255          ------L-----------I-
F2.CM.MP257          -----SL-----------I-
CONSENSUS_G          --------------------
G.BE.DRCBL           --------------------
G.FI.HH8793          --------------------
G.NG.92NG083         --I-----------------
G.SE.SE6165          -------T------------
CONSENSUS_H          --------------------
H.BE.VI991           --------------------
H.BE.VI997           -----P--x-----------
H.CF.90CF056         --------------------

CONSENSUS_J          -P----L-----------I-
J.SE.SE9173          -P----L-----------I-
J.SE.SE9280          -P----L-----------I-

CONSENSUS_K          -----?L-----------I-
K.BE.VI325           -----PL-----------I-
K.CD.EQTB11C         ------L-----------I-
K.CM.MP535           ------L-----------I-
N.CM.YBF30           -----PLT----------I-

CONSENSUS_O          -----------------A--
O.CM.ANT70C          -----------------A--
O.CM.MVP5180         -----------------A--
CRF01-AE.CF.90CF40   ------L-------------
CRF01-AE.TH.93TH25   -----PL-----------I-
CRF01-AE.TH.CM240    --A--PL-------------
CRF01-AE.TH.TH022    -----PV-------------
CRF01-AE.TH.TH047    -----P------------I-
CRF02_AG.FR.DJ263    --T--PM-----------I-
CRF02_AG.FR.DJ264    --T--PM-----------I-
CRF02_AG.NG.IBNG     --T--SM-----------I-
CRF03_AB.RU.KAL15    --T--SM-----------I-
CRF04_cpx.CY.94CY0   -----S------------I-
CRF04_cpx.GR.97PVC   ------M-----------I-
CRF04_cpx.GR.97PVM   -----S--------------
AC.ET.E3099G         ---Q--RA----------I-
AC.IN.21301          ------L-----------I-
AC.RW.92RW009        ------------------I-
AC.SE.SE9488         -----P------------I-
AC.ZM.ZAM174-21      -----PL-----------I-
AC.ZM.ZAM184         --------------------
AC.ZM.ZAM716-17      -----PL-----------I-
ACD.SE.SE8603        -----SL-----------I-
AD.SE.SE6954         ------------------I-
AD.SE.SE7108         --I---L-----------I-
ADHU.NO.NOGIL3       -----------------AI-
ADU.CD.MAL           --I---------------I-
AG.NG.G3             -V---P------------I-
AG.SE.SE7812         --T--S--------------
AGHU.GA.VI354        ------M-----------I-
AGJ.AU.BFP90         ------M-----------I-
AGJ.ML.95ML8         --I--------------AI-
AGU.CD.Z321          ------LT------------
BF.BR.93BR029.4      --------------------
DF.CD.VI961          ------L-----------I-
U.CD.VI1126          ------L-----------I-

CONSENSUS_CPZ        ------?----------?--
CPZ.CD.CPZANT        IAR--PLT---------C--
CPZ.GA.CPZGAB        --------------------
CPZ.US.CPZUS         ------M----------A--
```

Study Subject ID:01RCH45
Study Subject Clone:
Study Subject HLA:A23,A30,B57,B81,Cw7,Cw8
Sequence: Known reactive 20Mer0: AASRDLEKHGAITSSNTAAT Nef(32–51)

Possible HLA

A23	A*2301
A30	A*3001,A*3002,A*3003,A*3004
B57	Bw57,B*57,B*5701,B*5702,B*5703,B*5704
B81	B*8101
Cw7	Cw*0701,Cw*0702,Cw*0704,Cw*0706
Cw8	Cw*08,Cw*0801,Cw*0802,C*0802,Cw*0803

Possible Epitopes based on anchor residues

Anchor Residues Searched

Cw*0702	XXXXXXXX[YFL]
Cw*0702	XXXXXXX[YFL]
Cw*0702	XXXXXXXXX[YFL]

Study Subject ID:01RCH45
Study Subject Clone:
Study Subject HLA:A23,A30,B57,B81,Cw7,Cw8
Sequence: Known reactive 20Mer1: EKASFPEVIPMFSALSEGAT p24(29–48)

Possible HLA

A23	A*2301
A30	A*3001,A*3002,A*3003,A*3004
B57	Bw57,B*57,B*5701,B*5702,B*5703,B*5704
B81	B*8101
Cw7	Cw*0701,Cw*0702,Cw*0704,Cw*0706
Cw8	Cw*08,Cw*0801,Cw*0802,C*0802,Cw*0803

Possible Epitopes based on anchor residues

(4-12)	SFPEVIPMF	Cw*0702
(7-15)	EVIPMFSAL	Cw*0702
(5-12)	FPEVIPMF	Cw*0702
(8-15)	VIPMFSAL	Cw*0702
(3-12)	ASFPEVIPMF	Cw*0702
(6-15)	PEVIPMFSAL	Cw*0702

Anchor Residues Searched

Cw*0702	XXXXXXXX[YFL]
Cw*0702	XXXXXXX[YFL]
Cw*0702	XXXXXXXXX[YFL]

Study Subject ID:01RCH45
Study Subject Clone:
Study Subject HLA:A23,A30,B57,B81,Cw7,Cw8
Sequence: Known reactive 20Mer2: MFSALSEGATPQDLNTMLNT p24(39–58)

Possible HLA

A23	A*2301
A30	A*3001,A*3002,A*3003,A*3004
B57	Bw57,B*57,B*5701,B*5702,B*5703,B*5704
B81	B*8101
Cw7	Cw*0701,Cw*0702,Cw*0704,Cw*0706
Cw8	Cw*08,Cw*0801,Cw*0802,C*0802,Cw*0803

Possible Epitopes based on anchor residues

(5-13)	SEGATPQDL	Cw*0702
(9-17)	TPQDLNTML	Cw*0702
(6-13)	EGATPQDL	Cw*0702
(10-17)	PQDLNTML	Cw*0702
(4-13)	LSEGATPQDL	Cw*0702
(8-17)	ATPQDLNTML	Cw*0702

Anchor Residues Searched

Cw*0702	XXXXXXXX[YFL]
Cw*0702	XXXXXXX[YFL]
Cw*0702	XXXXXXXXX[YFL]

Study Subject ID:01RCH45
Study Subject Clone:
Study Subject HLA:A23,A30,B57,B81,Cw7,Cw8
Sequence: Known reactive 20Mer3: PQDLNTMLNTVGGHQAAMQM p24(49–68)

Possible HLA

A23	A*2301
A30	A*3001,A*3002,A*3003,A*3004
B57	Bw57,B*57,B*5701,B*5702,B*5703,B*5704
B81	B*8101
Cw7	Cw*0701,Cw*0702,Cw*0704,Cw*0706
Cw8	Cw*08,Cw*0801,Cw*0802,C*0802,Cw*0803

Possible Epitopes based on anchor residues

(1-8)	PQDLNTML	Cw*0702

Anchor Residues Searched

Cw*0702	XXXXXXXX[YFL]
Cw*0702	XXXXXXX[YFL]
Cw*0702	XXXXXXXXX[YFL]

Study Subject ID:01RCH45
Study Subject Clone:
Study Subject HLA:A23,A30,B57,B81,Cw7,Cw8
Sequence: Known reactive 20Mer4: QMVHQAISPRTLNAWVKVVE p24(9–28)

Possible HLA

A23	A*2301
A30	A*3001,A*3002,A*3003,A*3004
B57	Bw57,B*57,B*5701,B*5702,B*5703,B*5704
B81	B*8101
Cw7	Cw*0701,Cw*0702,Cw*0704,Cw*0706
Cw8	Cw*08,Cw*0801,Cw*0802,C*0802,Cw*0803

Possible Epitopes based on anchor residues

(4-12)	HQAISPRTL	Cw*0702
(5-12)	QAISPRTL	Cw*0702
(3-12)	VHQAISPRTL	Cw*0702

Anchor Residues Searched

Cw*0702	XXXXXXXX[YFL]
Cw*0702	XXXXXXX[YFL]
Cw*0702	XXXXXXXXX[YFL]

This table lists epitopes that are experimentally observed to be presented by a HLA type carried by the patient, but the de£ned epitope has substitutions relative to the peptides from your reference strains and so might be missed by your reagents: in HXB2 for Gag, Pol; MN for Env; BRU for Nef, relative to most B clade Sequences in the database:

Protein	Epitope in Database	Epitope in Ref. strain	Epitope in Consensus B	HLA	Notes
p24(15–23)	LSPRTLNAW	ISPRTLNAW	ISPRTLNAW	B57,B58	
p24(108–117)	TSTLQEQIGWF	TSTLQEQIGWM	TSTLQEQIGWM	B*57,B*5801	
p24(108–118)	TSTLQEQIGWF	TSTLQEQIGWM	TSTLQEQIGWM	B*5701	
gp160(156–165)	NCSFNISTSI	NCSFNITTSI	NCSFNITTSI	Cw*08	
gp160(156–165)	NCSFNISTSI	NCSFNITTSI	NCSFNITTSI	Cw8	
gp160(239–247)	CTNVSTVQC	CKNVSTVQC	CTNVSTVQC	Cw8	
gp160(704–712)	IVNRNRQGY	IVNRVRQGY	IVNRVRQGY	A*3002	
gp160(794–802)	KYCWNLLQY	KYWWNLLQY	KYWWNLLQY	A*3002	

Table 1: **p24**

HXB2 Location	Author Location	Sequence	Immunogen	Species(HLA)	References
p24(15–23)	p24()	LSPRTLNAW	HIV-1 exposed seronegative	human(B57,B58)	[Kaul (2000)]
	• 11/16 heavily HIV exposed but persistently seronegative sex-workers in Nairobi had HIV-speci£c CD8 gamma-IFN responses in the cervix – systemic CD8+ T cell responses tended to be to the same epitopes but at generally lower levels than cervical CD8+ T cell responses • Low risk individuals did not have such CD8+ cells • CD8+ epitopes T cell DTVLEDINL (3 individuals), SLYNVATL (4 individuals), LSPRTLNAW (3 individuals) and YPLTFGWCF (4 individuals) were most commonly recognized by the HIV-resistant women				
p24(108–117)	p24(240–249 LAI)	TSTLQEQIGWF	HIV-1 infection	human(B*57,B*5801)	[Goulder (1996)]
	• Response to this epitope was found in 4 slow progressing HLA-B*57 individuals, in 2 it was dominant or very strong • For one donor (from Zimbabwe) this was de£ned as the optimal peptide • This epitope can be presented in the context of the closely related HLA molecules B*5801 and B*57				
p24(108–118)	p24(240–249 LAI)	TSTLQEQIGWF	HIV-1 infection	human(B*5701)	[Brander & Goulder(2001)]
	• C. Brander notes this is a B*5701 epitope				

Table 2: **gp160**

HXB2 Location	Author Location	Sequence	Immunogen	Species(HLA)	References
gp160(156–165)	gp120(156–165)	NCSFNISTSI	HIV-1 infection	human(Cw*08)	[Ferris (1999)]
	• Recognized by CTL clone LWF A5, isolated from a lab worker exposed to HIV-1 in 1985 • The processing of this epitope is TAP1/2-dependent, as are most Env epitopes, and it contains two N-linked glycosylation sites that are glycosylated in Env • Only peptide that has been deglycosylated, a process that changes asparagine (N) to aspartic acid (D) was recognized: the aspartic acid at position 5 was critical, position 1 could be either D or N • This peptide also contains a Cys involved in a disul£de linkage but reducing conditions did not effect recognition by CTL clone LWF A5 • The HIV-1 Env epitopes are typically processed by a TAP1/2 dependent mechanism, which involves cotranslational translocation into the ER, glycosylation, export back into the cytosol, and deglycosylation for processing, and retransport into the ER for the association with class I molecules • The particular pathway of generating an epitope may have an impact on the presentation of that epitope, quantitatively as well as qualitatively				
gp160(156–165)	gp120(156–165 IIIB)	NCSFNISTSI	HIV-1 infection	human(Cw8)	[Sipsas (1997)]
	• HIV IIIB proteins were used to de£ne the range of CTL epitopes recognized by 3 lab workers accidentally infected with HIV-1 IIIB • NCSFNITTSI, a variant found in HIV-1 MN, was not recognized, thus this epitope was type-speci£c • NCSFNISTSI contains two potential N-linked glycosylation sites and cysteine residue, possibly related to the requirement for a high sensitizing dose of peptide for CTL activity				
gp160(239–247)	gp120(241–249 LAI)	CTNVSTVQC	HIV-1 infection	human(Cw8)	[Sipsas (1997)]
	• HIV IIIB proteins were used to de£ne the range of CTL epitopes recognized by 3 lab workers accidentally infected with HIV-1 IIIB • CTNVSTVQC contains a potential N-linked glycosylation site and cysteine residues, possibly related to a requirement for a high sensitizing dose of peptide for CTL activity				
gp160(704–712)	gp160(704–712 LAI)	IVNRNRQGY		human(A*3002)	[Brander & Goulder(2001), Goulder (2001)]
	• C. Brander notes this is an A*3002 epitope				
gp160(794–802)	gp160(794–802 LAI)	KYCWNLLQY		human(A*3002)	[Brander & Goulder(2001), Goulder (2001)]
	• C. Brander notes this is an A*3002 epitope				

Table 3: **All De£ned Epitopes within the 20mer, regardless of HLA type**

HXB2 Location	Author Location	Sequence	Immunogen	Species(HLA)	References

Table 4: **All De£ned Epitopes within the 20mer, regardless of HLA type**

HXB2 Location	Author Location	Sequence	Immunogen	Species(HLA)	References

Table 5: **All De£ned Epitopes within the 20mer, regardless of HLA type**

HXB2 Location	Author Location	Sequence	Immunogen	Species(HLA)	References

Table 6: **All De£ned Epitopes within the 20mer, regardless of HLA type**

HXB2 Location	Author Location	Sequence	Immunogen	Species(HLA)	References

Table 7: **All De£ned Epitopes within the 20mer, regardless of HLA type**

HXB2 Location	Author Location	Sequence	Immunogen	Species(HLA)	References

p17 CTL Map

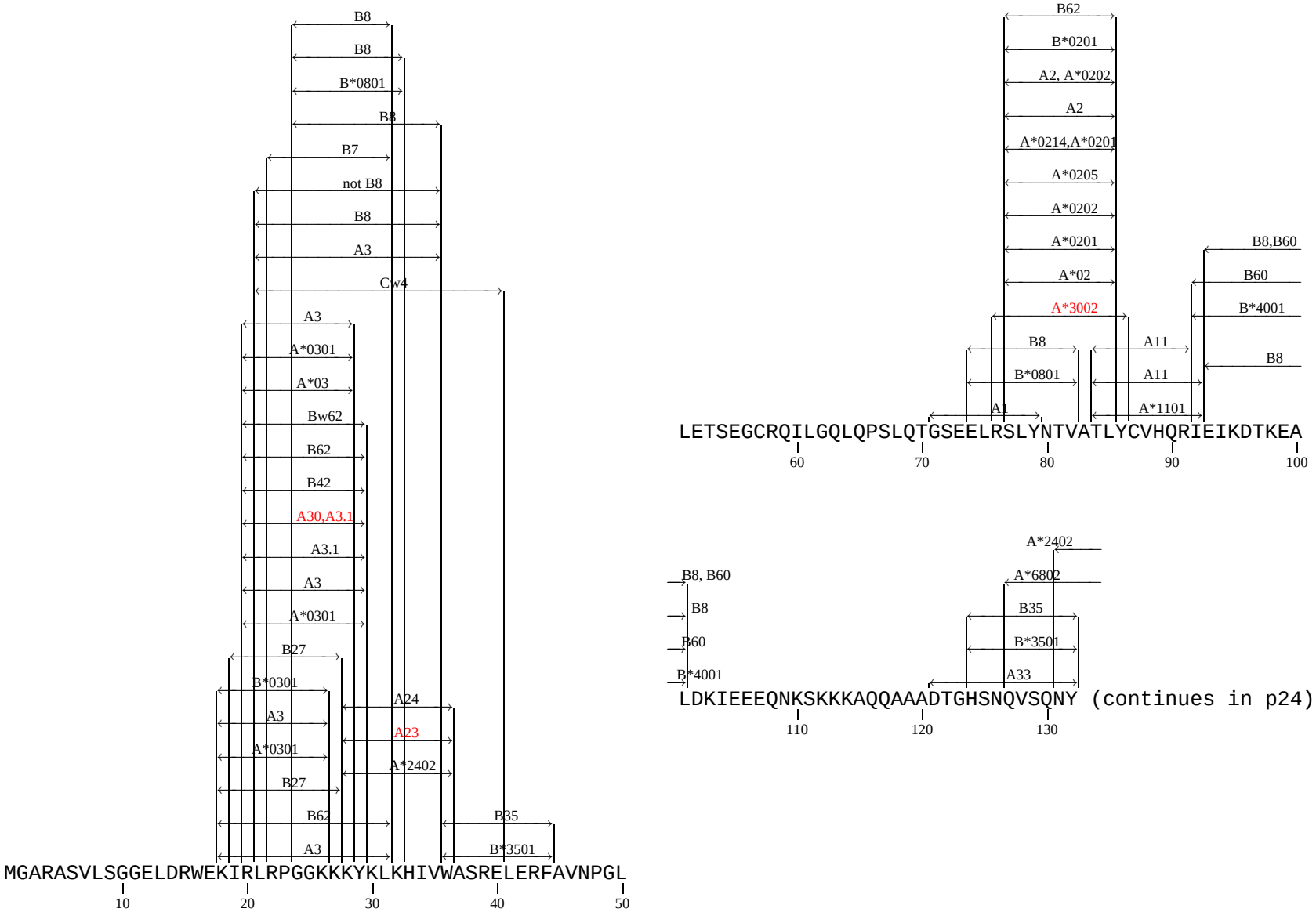
B8
B8
B*0801
B8
B7
not B8
B8
A3
Cw4
A3
A*0301
A*03
Bw62
B62
B42
A30,A3.1
A3.1
A3
A*0301
B27
B*0301
A3
A*0301
B27
B62
A3
A24
A23
A*2402
B35
B*3501
MGARASVLSGGELDRWEKIRLRPGGKKKYKLKHIVWASRELERFAVNPGL
10
20
30
40
50
B62
B*0201
A2, A*0202
A2
A*0214,A*0201
A*0205
A*0202
A*0201
A*02
A*3002
B8
B*0801
A1
A11
A11
A*1101
B8,B60
B60
B*4001
B8
LETSEGCRQILGQLQPSLQTGSEELRSLYNTVATLYCVHQRIEIKDTKEA
60
70
80
90
100
A*2402
B8, B60
A*6802
B8
B35
B60
B*3501
B*4001
A33
LDKIEEEQNKSKKKAQQAAADTGHSNQVSQNY (continues in p24)
110
120
130

p24 CTL Map

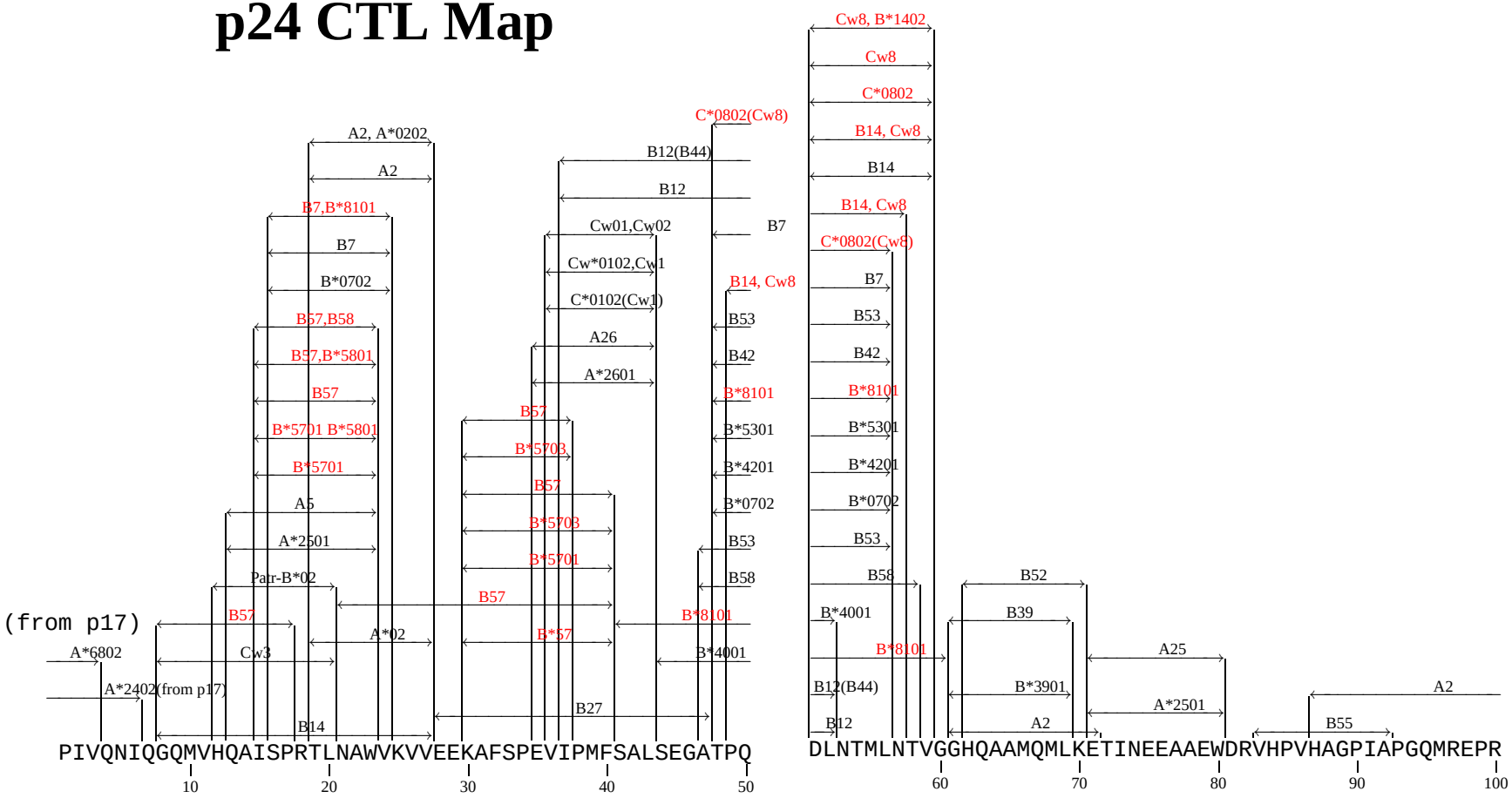
A2, A*0202
A2
B7,B*8101
B7
B*0702
B57,B58
B57,B*5801
B57
B*5701 B*5801
B*5701
A5
A*2501
Pair-B*02
B57
(from p17)
A*6802
Cw3
A*2402(from p17)
A*02
B14
B57
B*5703
B57
B*5703
B57
B*5701
B*57
B27
C*0802(Cw8)
B12(B44)
B12
Cw01,Cw02
Cw*0102,Cw1
C*0102(Cw1)
A26
A*2601
B7
B14, Cw8
B53
B42
B*8101
B*5301
B*4201
B*0702
B53
B58
B*8101
B*4001
Cw8, B*1402
Cw8
C*0802
B14, Cw8
B14
B14, Cw8
C*0802(Cw8)
B7
B53
B42
B*8101
B*5301
B*4201
B*0702
B53
B58
B*4001
B*8101
B12(B44)
B12
B52
B39
B*3901
A2
A25
A*2501
A2
B55
PIVQNIQGQMVHQAISPRTLNAWVKVVEEKAFSPEVIPMFSALSEGATPQ
10
20
30
40
50
DLNTMLNTVGGHQAAMQMLKETINEEAAEWDRVHPVHAGPIAPGQMREPR
60
70
80
90
100

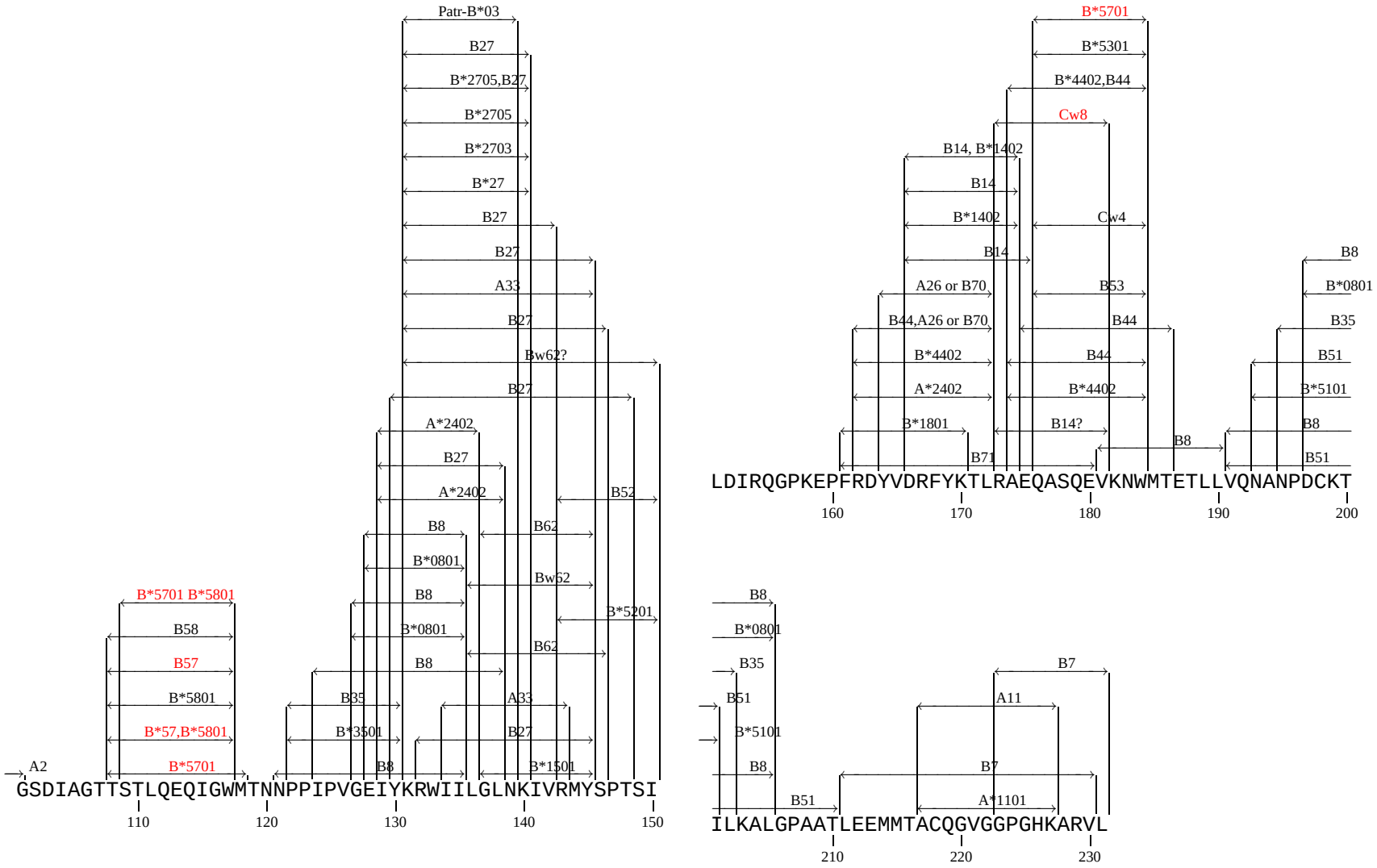
Patr-B*03
B27
B*2705,B27
B*2705
B*2703
B*27
B27
B27
A33
B27
Bw62?
B27
A*2402
B27
A*2402
B52
B8
B62
B*0801
Bw62
B8
B*5201
B*0801
B62
B8
B35
A33
B*3501
B27
B8
B*1501
B*5701 B*5801
B58
B57
B*5801
B*57,B*5801
B*5701
A2
GSDIAGTTSTLQEQIGWMTNNPPIPVGEIYKRWIILGLNKIVRMYSPTSI
110
120
130
140
150
B*5701
B*5301
B*4402,B44
Cw8
B14, B*1402
B14
B*1402
Cw4
B14
A26 or B70
B53
B44,A26 or B70
B44
B*4402
B44
A*2402
B*4402
B*1801
B14?
B71
B8
B8
B*0801
B35
B51
B*5101
B8
B51
LDIRQGPKEPFRDYVDRFYKTLRAEQASQEVKNWMTETLLVQNANPDCKT
160
170
180
190
200
B8
B*0801
B35
B51
B*5101
B8
B51
B7
A11
B7
A*1101
ILKALGPAATLEEMMTACQGVGGPGHKARVL
210
220
230

p2p7p1p6 CTL Map

```
    AEAMSQVTNSATIMMQRGNFRNQRKIVKCFNCGKEGHTARNCRAPRKKGC
              |         |         |         |         |
             10        20        30        40        50

 p2 <-            <>
start      p2 end  p7 start


        A2                        A2
    WKCGKEGHQMKDCTERQANFLGKIWPSYKGRPGNFLQSRPEPTAPPEESF
              |         |         |         |         |
             60        70        80        90       100

                  <>                  <>
              p7 end  p1 start    p1  p6 start
                                 end


                         B7
    RSGVETTTPPQKQEPIDKELYPLTSLRSLFGNDPSSQ
              |         |         |
            110       120       130
                                p6 end ->
```

Protease CTL Map

```
A*7401
A*6802,A*7401,A19
A*6802                                  A*6802
PQVTLWQRPLVTIKIGGQLKEALLDTGADDTVLEEMSLPGRWKPKMIGGI
          |         |         |         |         |
         10        20        30        40        50

                                  A*0201
GGFIKVRQYDQILIEICGHKAIGTVLVGPTPVNIIGRNLLTQIGCTLNF
          |         |         |         |
         60        70        80        90
```

RT CTL Map

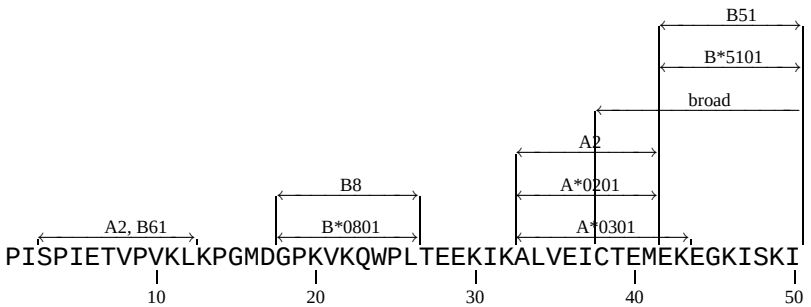
B51
B*5101
broad
A2
B8
A*0201
A2, B61
B*0801
A*0301
PISPIETVPVKLKPGMDGPKVKQWPLTEEKIKALVEICTEMEKEGKISKI
10
20
30
40
50

Cw4
broad
A3
GPENPYNTPVFAIKKKDSTKWRKLVDFRELNKRTQDFWEVQLGIPHPAGL
60
70
80
90
100

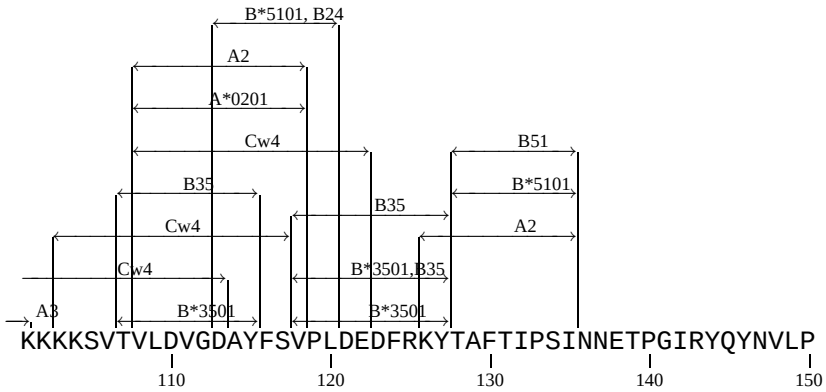
B*5101, B24
A2
A*0201
Cw4
B51
B35
B*5101
B35
Cw4
A2
Cw4
B*3501,B35
A3
B*3501
B*3501
KKKKSVTVLDVGDAYFSVPLDEDFRKYTAFTIPSINNETPGIRYQYNVLP
110
120
130
140
150

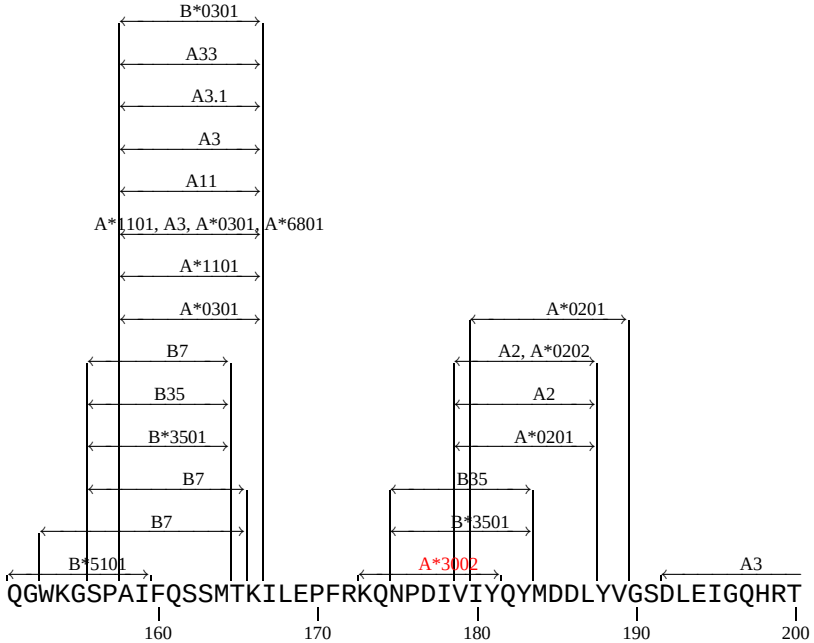
B*0301
A33
A3.1
A3
A11
A*1101, A3, A*0301, A*6801
A*1101
A*0301
A*0201
B7
A2, A*0202
B35
A2
B*3501
A*0201
B7
B35
B7
B*3501
B*5101
A*3002
A3
QGWKGSPAIFQSSMTKILEPFRKQNPDIVIYQYMDDLYVGSDLEIGQHRT
160
170
180
190
200

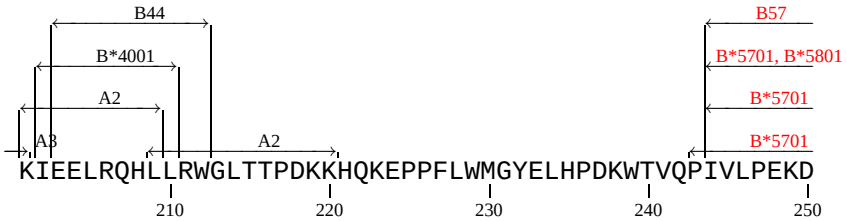
B44
B57
B*4001
B*5701, B*5801
A2
B*5701
A3
A2
B*5701
KIEELRQHLLRWGLTTPDKKHQKEPPFLWMGYELHPDKWTVQPIVLPEKD
210
220
230
240
250

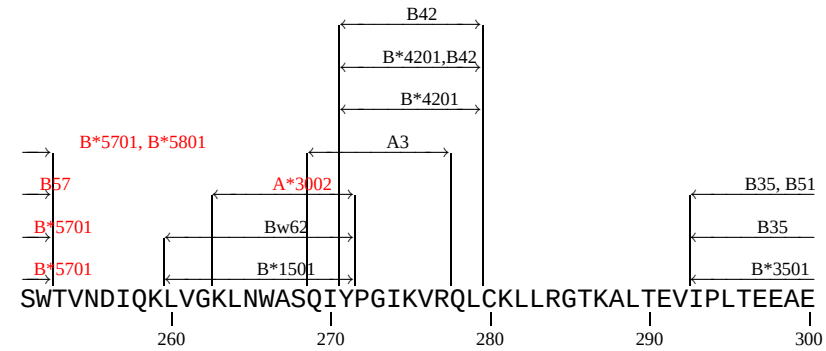

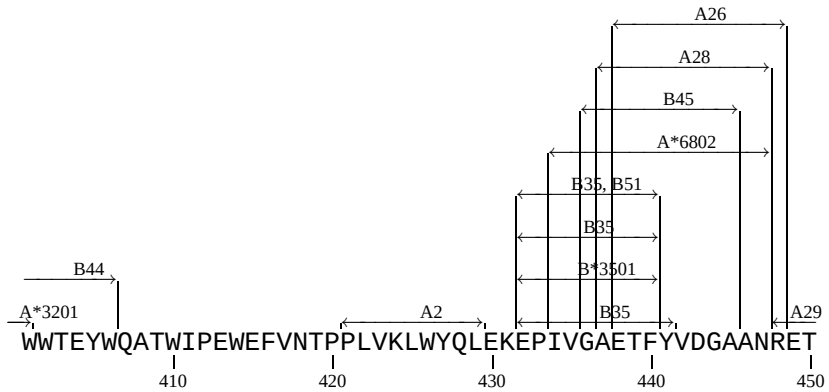

p15 RNase start <-

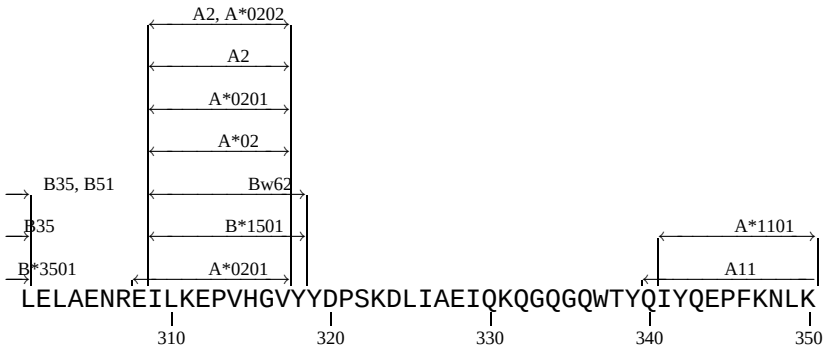

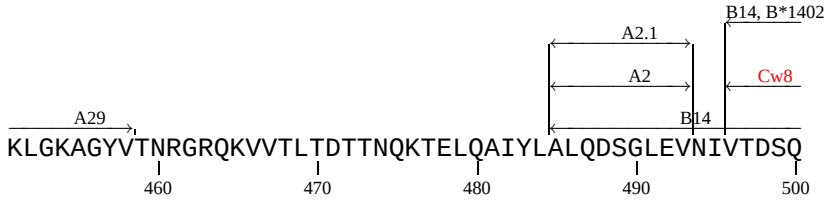

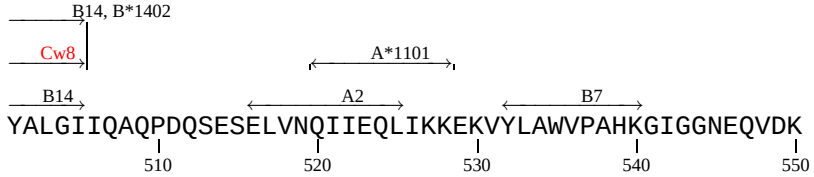

LVSAGIRKVL

-> p15 RNase end

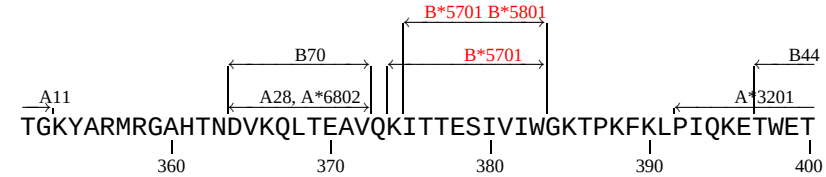

Integrase CTL Map

B*5101

FLDGIDKAQDEHEKYHSNWRAMASDFNLPPVVAKEIVASCDKCQLKGEAM

10 20 30 40 50

A*2402 A*6802

HGQVDCSPGIWQLDCTHLEGKVILVAVHVASGYIEAEVIPAETGQETAYF

60 70 80 90 100

A*6802

LLKLAGRWPVKTIHTDNGSNFTGATVRAACWWAGIKQEFGIPYNPQSQGV

110 120 130 140 150

A*1101

B57

B*5701

VESMNKELKKIIGQVRDQAEHLKTAVQMAVFIHNFKRKGGIGGYSAGERI

160 170 180 190 200

A2

A*0201

VDIIATDIQTKELQKQITKIQNFRVYYRDSRNPLWKGPAKLLWKGEGAVV

210 220 230 240 250

IQDNSDIKVVPRRKAKIIRDYGKQMAGDDCVASRQDED

260 270 280

Rev CTL Map

B*5801

B*5701

MAGRSGDSDEELIRTVRLIKLLYQSNPPPNPEGTRQARRNRRRRWRERQR

10 20 30 40 50

Cw5

B14, Cw8

A1

B14

QIHSISERILGTYLGRSAEPVPLQLPPLERLTLDCNEDCGTSGTQGVGSP

60 70 80 90 100

QILVESPTVLESGTKE

110

gp160 CTL Map

<- gp120 start

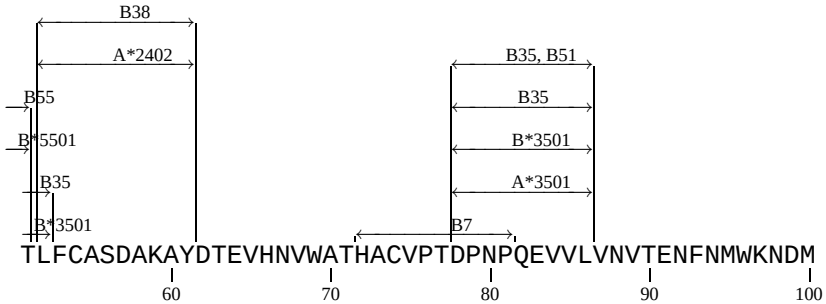

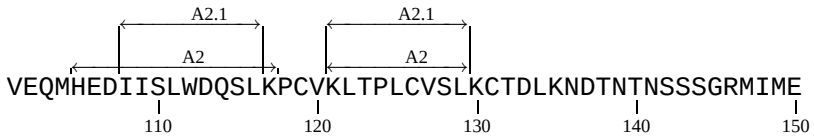

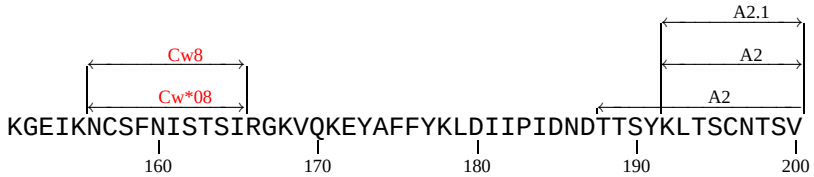

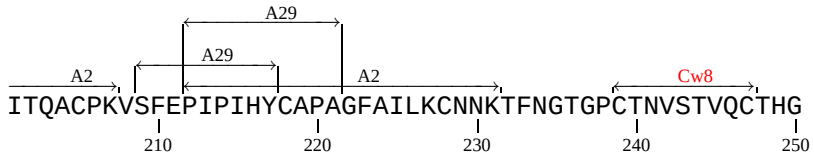

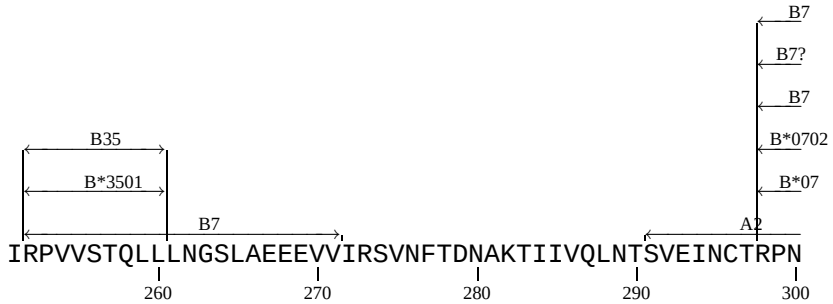

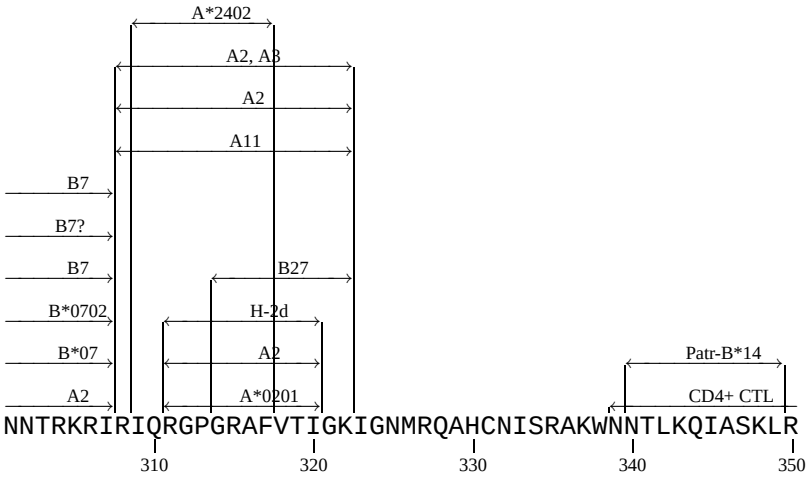

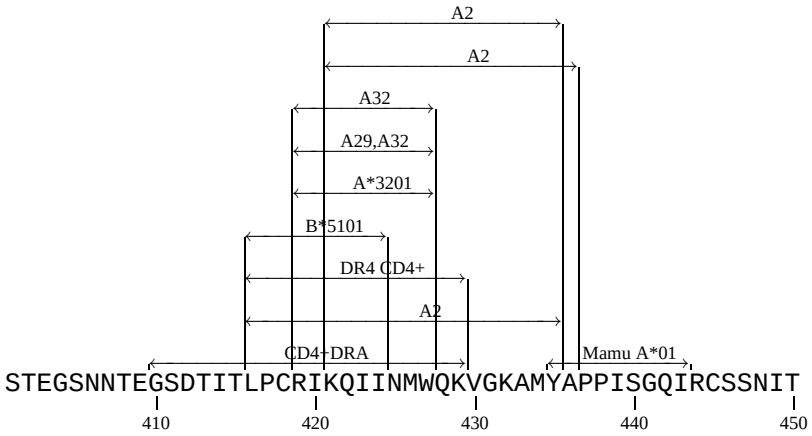

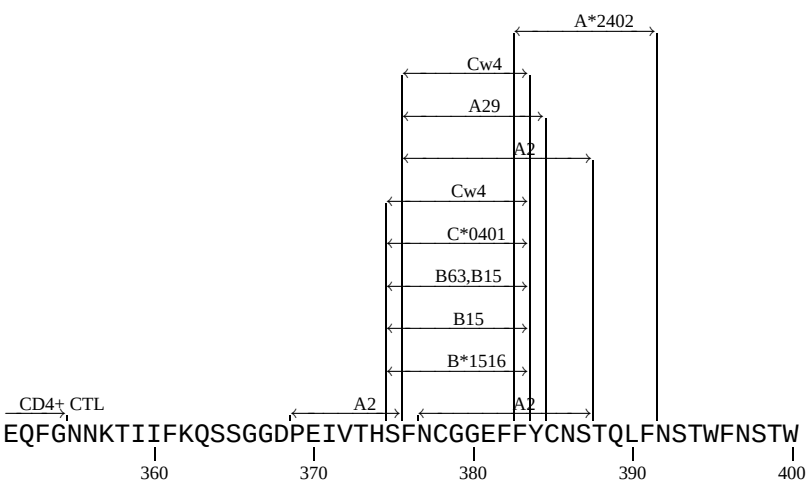

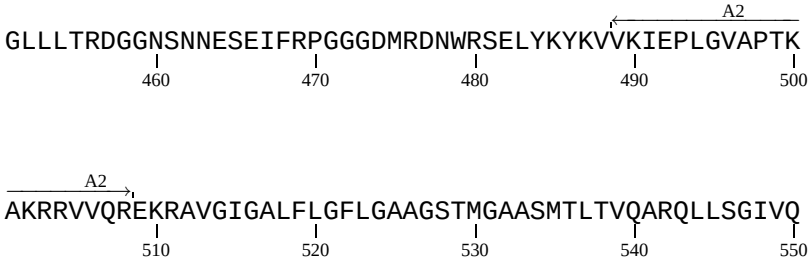

gp120 end <> gp41 start

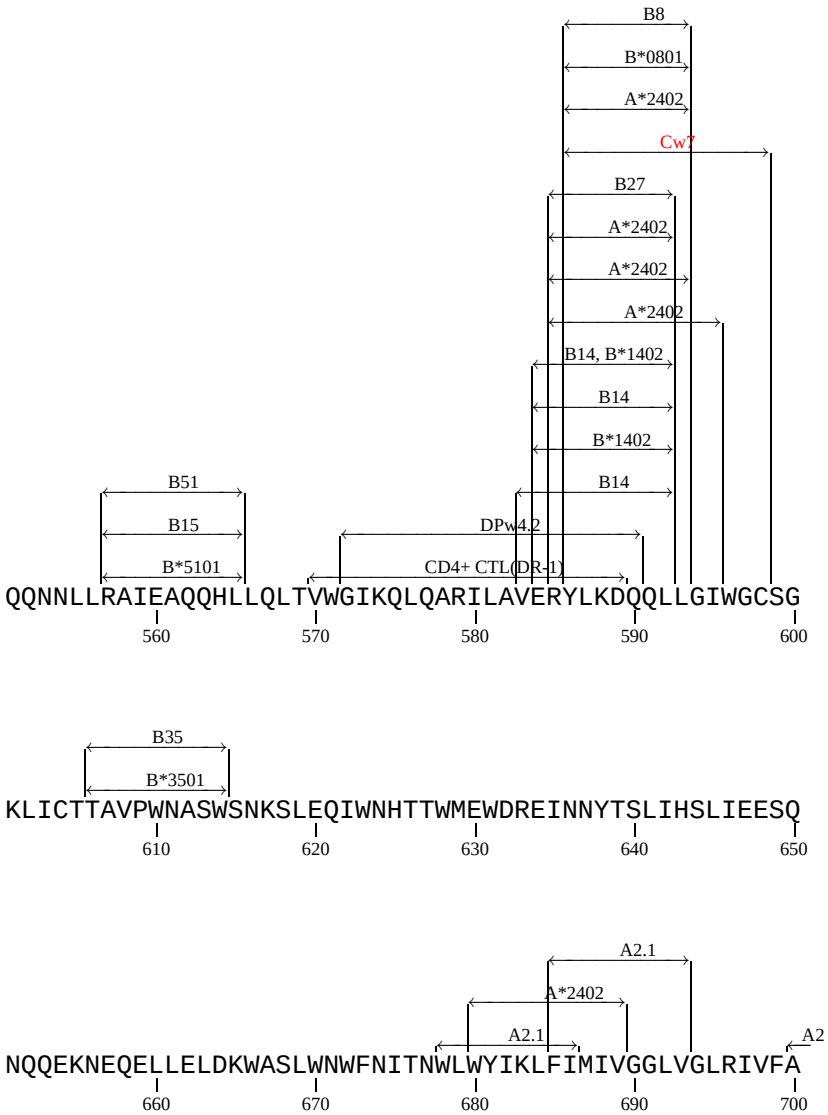
B8
B*0801
A*2402
Cw7
B27
A*2402
A*2402
A*2402
B14, B*1402
B14
B*1402
B14
B51
B15
B*5101
DPw4.2
CD4+ CTL(DR-1)
QQNNLLRAIEAQQHLLQLTVWGIKQLQARILAVERYLKDQQLLGIWGCSG
560
570
580
590
600
B35
B*3501
KLICTTAVPWNASWSNKSLEQIWNHTTWMEWDREINNYTSLIHSLIEESQ
610
620
630
640
650
A2.1
A*2402
A2.1
A2
NQQEKNEQELLELDKWASLWNWFNITNWLWYIKLFIMIVGGLVGLRIVFA
660
670
680
690
700

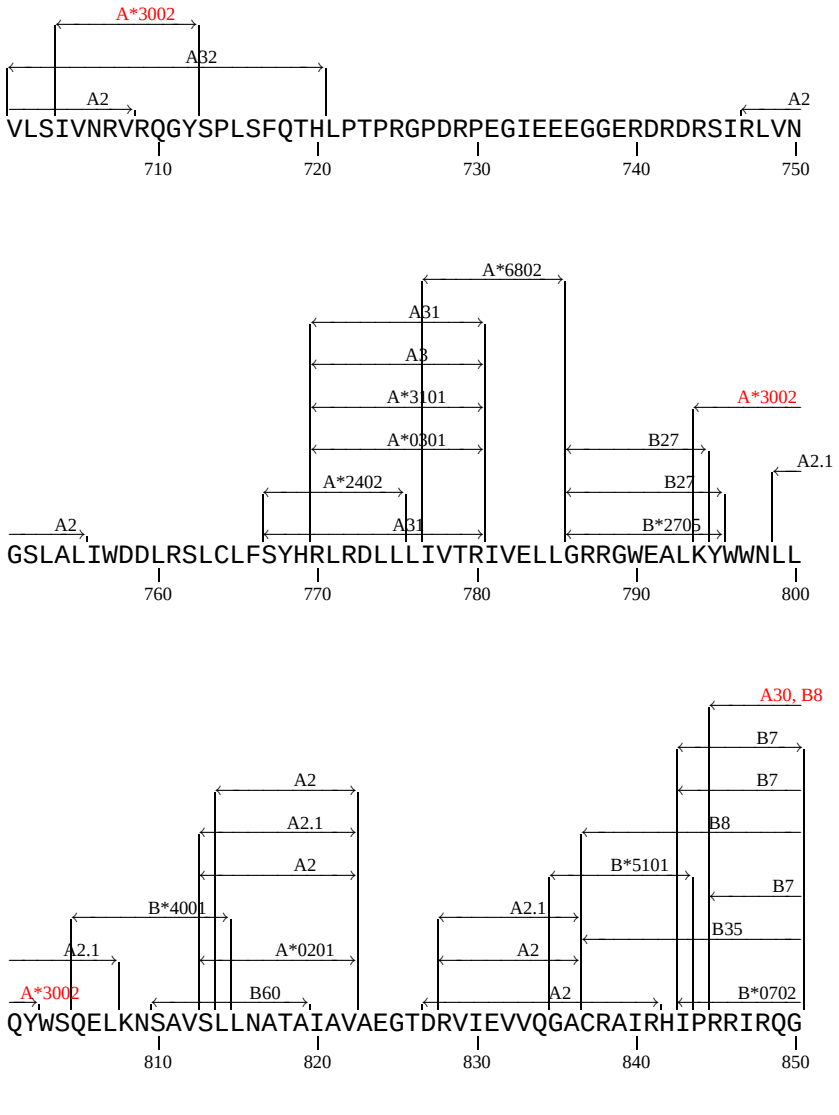
A*3002
A32
A2
A2
VLSIVNRVRQGYSPLSFQTHLPTPRGPDRPEGIEEEGGERDRDRSIRLVN
710
720
730
740
750
A*6802
A31
A3
A*3101
A*0301
A*2402
A31
A*3002
B27
B27
B*2705
A2.1
A2
GSLALIWDDLRSLCLFSYHRLRDLLLIVTRIVELLGRRGWEALKYWWNLL
760
770
780
790
800
A30, B8
B7
B7
A2
A2.1
A2
B8
B*5101
B7
B*4001
A2.1
B35
A2.1
A*0201
A2
A*3002
B60
A2
B*0702
QYWSQELKNSAVSLLNATAIAVAEGTDRVIEVVQGACRAIRHIPRRIRQG
810
820
830
840
850

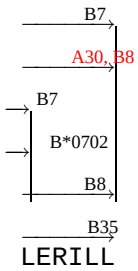
B7
A30, B8
B7
B*0702
B8
B35
LERILL
-> gp41 end

Nef CTL Map

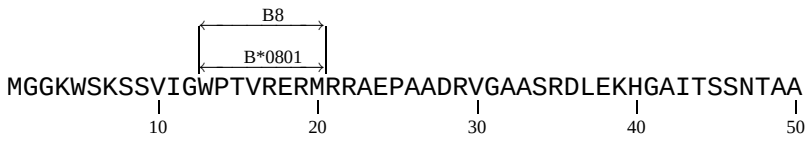
B8
B*0801
MGGKWSKSSVIGWPTVRERMRRAEPAADRVGAASRDLEKHGAITSSNTAA
10
20
30
40
50

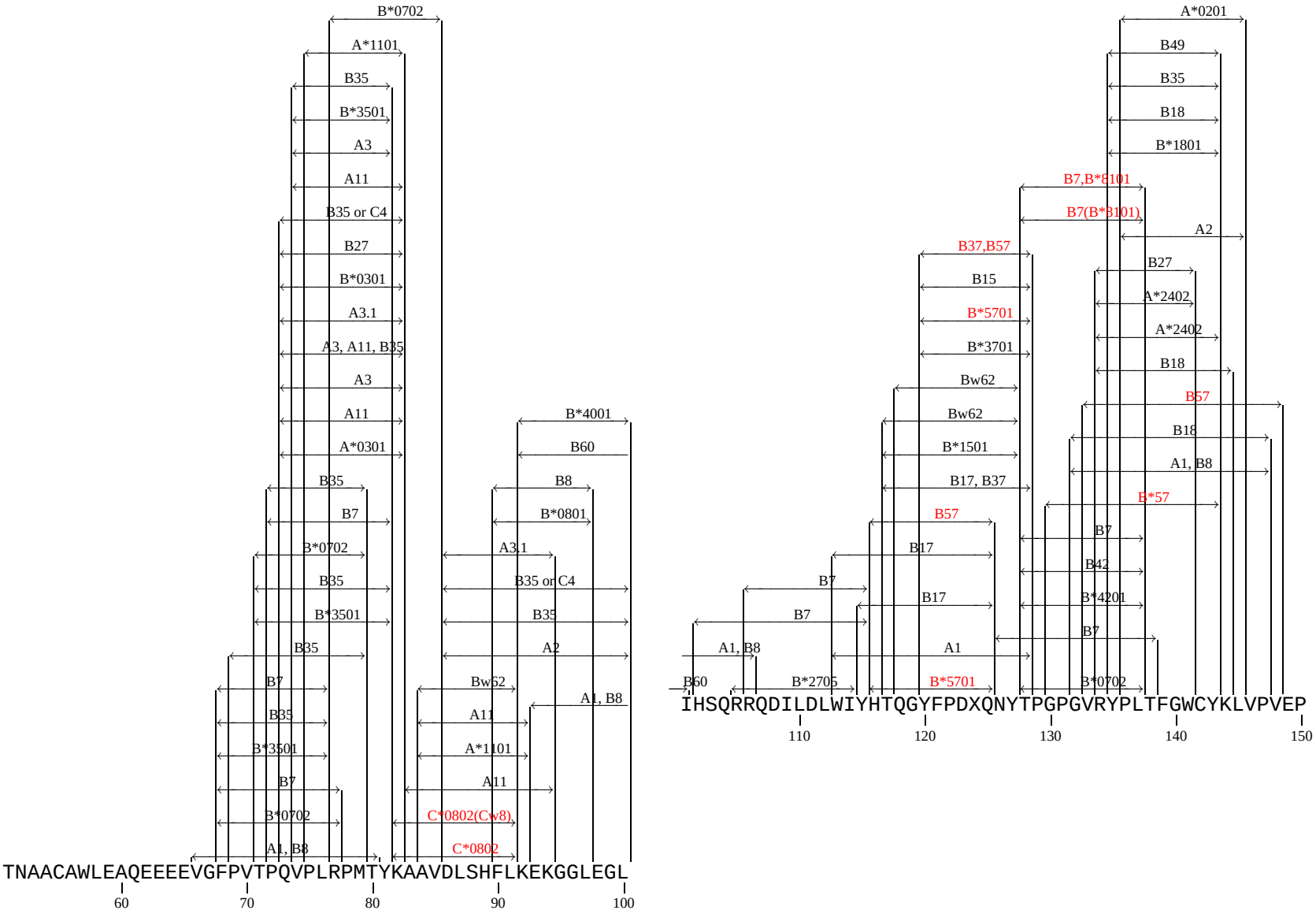
B*0702
A*1101
B35
B*3501
A3
A11
B35 or C4
B27
B*0301
A3.1
A3, A11, B35
A3
A11
A*0301
B35
B7
B*0702
B35
B*3501
B35
B7
B35
B*3501
B7
B*0702
A1, B8
B*4001
B60
B8
B*0801
A3.1
B35 or C4
B35
A2
Bw62
A1, B8
A11
A*1101
A11
C*0802(Cw8)
C*0802
TNAACAWLEAQEEEEVGFPVTPQVPLRPMTYKAAVDLSHFLKEKGGLEGL
60
70
80
90
100
A*0201
B49
B35
B18
B*1801
B7,B*8101
B7(B*8101)
A2
B37,B57
B27
B15
A*2402
B*5701
A*2402
B*3701
B18
Bw62
B57
Bw62
B18
B*1501
A1, B8
B17, B37
B*57
B57
B7
B17
B42
B7
B17
B*4201
B7
B7
A1, B8
A1
B60
B*2705
B*5701
B*0702
IHSQRRQDILDLWIYHTQGYFPDXQNYTPGPGVRYPLTFGWCYKLVPVEP
110
120
130
140
150

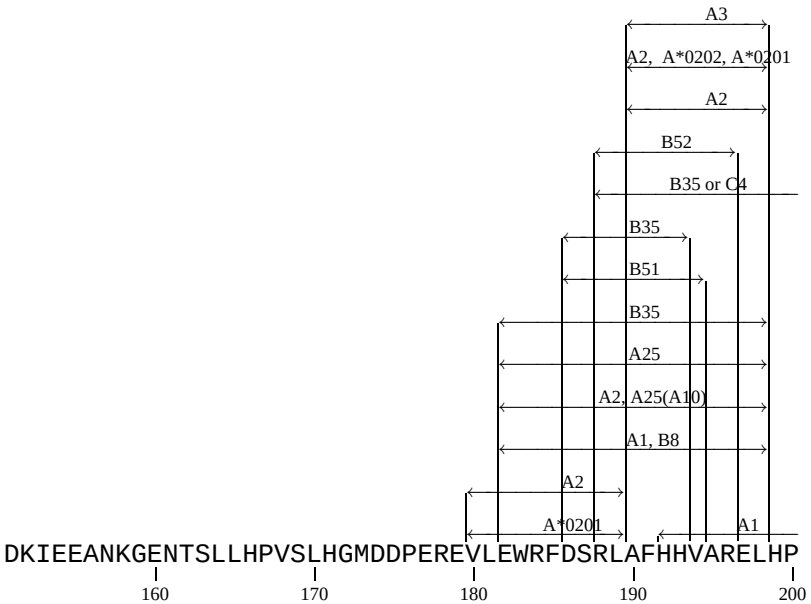

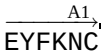

[Brander & Goulder(2001)] C. Brander & P. Goulder. The evolving £eld of HIV CTL epitope mapping: New approaches to the identi£cation of novel epitopes. *HIV Molecular Immunology Database* pages IV–1, 2001. Notes: This review article in the annual HIV Molecular Immunology Compendium presents the table of Optimal CTL Epitopes that has been curated by Brander and others for several years.

[Ferris (1999)] R. L. Ferris, C. Hall, N. V. Sipsas, J. T. Safrit, A. Trocha, R. A. Koup, R. P. Johnson, & R. F. Siliciano. Processing of HIV-1 envelope glycoprotein for class I-restricted recognition: dependence on TAP1/2 and mechanisms for cytosolic localization. *J Immunol* **162**:1324–32, 1999. (Medline: 99138809).

[Goulder (2001)] P. Goulder, M. Addo, M. Altfeld, & et al. Rapid de£nition of £ve novel HLA-A*3002 restricted HIV speci£c CTL epitopes by intracellular cytokine staining and Elispot assays. *J. Virol* **75(3)**:1339–1347, 2001. (Medline: 11152507).

[Goulder (1996)] P. J. R. Goulder, M. Bunce, P. Krausa, K. McIntyre, S. Crowley, B. Morgan, A. Edwards, P. Giangrande, R. E. Phillips, & A. J. McMichael. Novel, cross-restricted, conserved and immunodominant cytotoxic T lymphocyte epitopes in slow HIV Type 1 infection. *AIDS Res and Hum Retroviruses* **12**:1691–1698, 1996. (Medline: 97118362) Notes: HLA-B*57 is over-represented in slow progressors. HLA*5801 is a closely related molecule, and while the de£ned anchor residues of HLA*5801 can be used to predict epitopes in HIV-1 proteins, the CTL from HLA-B*57 positive individuals have limited cross-presentation capacity with HLA*5801 targets. In this paper £ve new HLA-B*57 epitopes were de£ned.

[Kaul (2000)] R. Kaul, F. A. Plummer, J. Kimani, T. Dong, P. Kiama, T. Rostron, E. Njagi, K. S. MacDonald, J. J. Bwayo, A. J. McMichael, & S. L. Rowland-Jones. HIV-1-speci£c mucosal CD8+ lymphocyte responses in the cervix of HIV-1- resistant prostitutes in Nairobi. *J Immunol* **164**:1602–11, 2000. (Medline: 20109119).

[Sipsas (1997)] N. V. Sipsas, S. A. Kalams, A. Trocha, S. He, W. A. Blattner, B. D. Walker, & R. P. Johnson. Identi£cation of type-speci£c cytotoxic T lymphocyte responses to homologous viral proteins in laboratory workers accidentally infected with HIV-1. *J Clin Invest* **99**:752–62, 1997. (Medline: 97197584) Notes: To examine a situation where the autologous strain and the reference reagents would be the same, the CTL response of three lab workers accidentally infected with HIV IIIB was studied. Both group speci£c and type speci£c epitopes were targets for CTL clones. One subject had a broadening of CTL response over time, using a broad range of restricting HLA class I alleles. Characterization of the cytotoxic T lymphocyte (CTL) response against HIV-1 has been limited by the use of target cells expressing viral proteins from laboratory isolates of HIV-1. This approach has favored identi£cation of group-speci£c CTL responses and precluded assessment of the extent of type-speci£c CTL responses directed against HIV-1. Using

cells expressing viral proteins from the HIV-1 IIIB strain, we performed a detailed characterization of HIV-1-speci£c CTL response in three laboratory workers accidentally infected with HIV-1 IIIB. Eight of the epitopes identi£ed were group speci£c, lying in relatively conserved regions of Gag, reverse transcriptase, and envelope. Three type-speci£c epitopes were identi£ed, two of them in highly variable regions of envelope. In longitudinal studies in one subject, seven different epitopes and £ve different restricting HLA class I alleles were identi£ed, with a progressive increase in the number of CTL epitopes recognized by this subject over time. Our data demonstrate that type-speci£c CTL responses make up a signi£cant proportion of the host cellular immune response against HIV-1 and that a broadening of epitope speci£city may occur.